THE ROYAL ENGINEERS JOURNAL.—FEBRUARY, 1913. Pages 65—128.

THE ROYAL ENGINEERS JOURNAL.

Vol. XVII. No. 2. FEBRUARY, 1913.

CONTENTS.

CONTENTS.

Authors alone are responsible for the statements made and the opinions expressed in their papers.

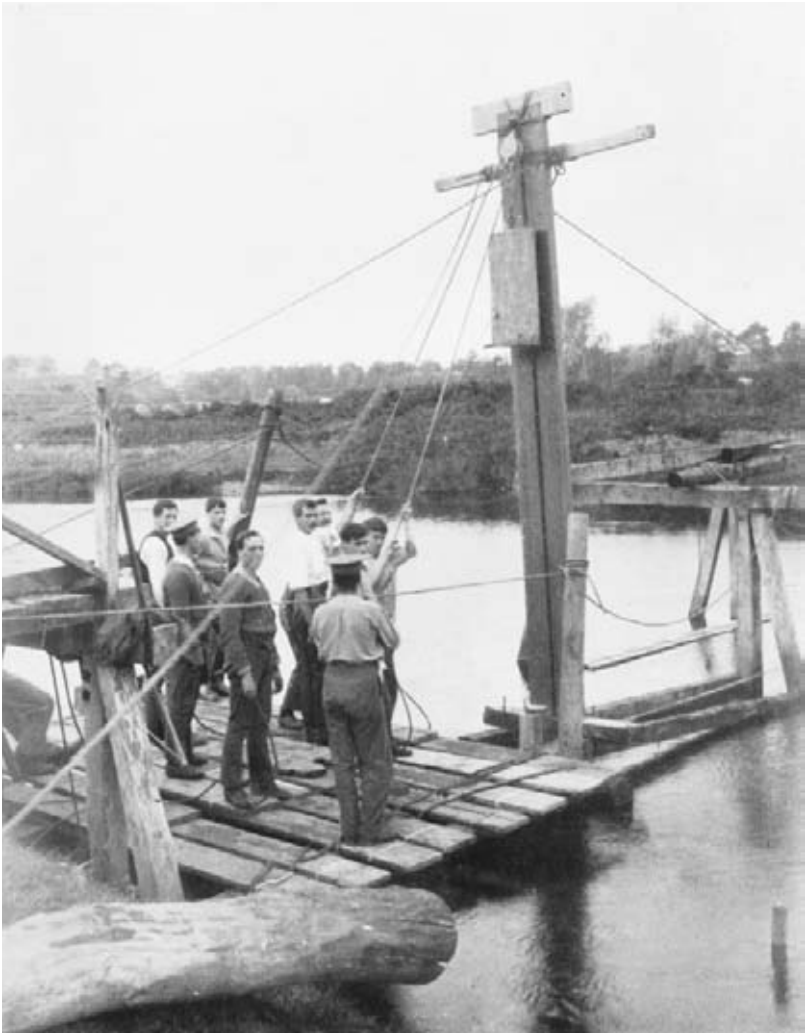

Improvised Pile Driver

AN IMPROVISED PILE DRIVER.

By Lieut. A. V. T. Robinson, R.E.

General Description.—The pile driver consists of two Weldon Trestle legs standing on a half-sleeper, as base, which is spiked to the platform or bridgehead on which the driver works. A cross-bar is lashed to the tops of the legs to support the monkey, which is worked up and down by means of a pulley block lashed to the cross-bar. The monkey consists of a block of wood, *200 lbs. in weight, through which two holes are bored to take iron bolts 2 ft. 3 in. long. These bolts work up and down between the Weldon Trestle legs, thereby keeping the monkey in position. The monkey has ½-in. iron bands round it, as shown on sketch. The pile driver is prevented from falling by four guys attached to any convenient holdfast.

Method of Fixing Up.—The Weldon Trestle legs are placed side by side on the head of the driver, fixed up and guys fastened. They can then be raised by the guys and shifted into position by mauls.

Number of Men.—The monkey can then be put on. Six men will put up this pile driver in half an hour and get it into position. It takes four men to work it, and two reliefs are required; so that the whole detachment for working should consist of a N.C.O. and eight men.

Detail of Stores Required and How Carried.—The following are the stores required for the pile driver :—

(*a*). *Carried in Company Equipment.*

2 Weldon Trestle legs.
Blocks 2-in.—1.
Lashings 2-in.—12.
Pickets 5-ft.—4.

(*b*). *To be Made and Carried with Company in G.S. Wagon.*

2 half-sleepers halved for W.T. legs.
2 ⅝-in. bolts 2 ft. 3 in. long with nuts and plates.
Iron band ½ in. wide, ¼ in. stuff, 10 ft. length, for monkey.

The total weight of these stores would be about 28 lbs.

* This weight can of course easily be increased.

(*c*). *Monkey.*—A spar 3 ft. long and 15 in. diameter—weight about 200 lbs. This would not need to be carried as it could probably be obtained locally.

Results Obtained.—A good deal of pile driving was done with this machine last summer. Twelve piles 8 ins. × 8 ins. and 9 ft. long were driven. The detachment consisted of a N.C.O. and eight men. The average time taken was one hour per pile—this included fixing the pile driver each time and placing the pile in position. Each pile was driven in 5 ft. to 6 ft. and the time taken in actual driving was half an hour per pile. The bed of the river was of gravel, and at a depth of 3 ft. some hard rock was usually met with. The *Plate* shows details of pile driver and the photograph shows it at work.

IMPROVISED PILE DRIVER.

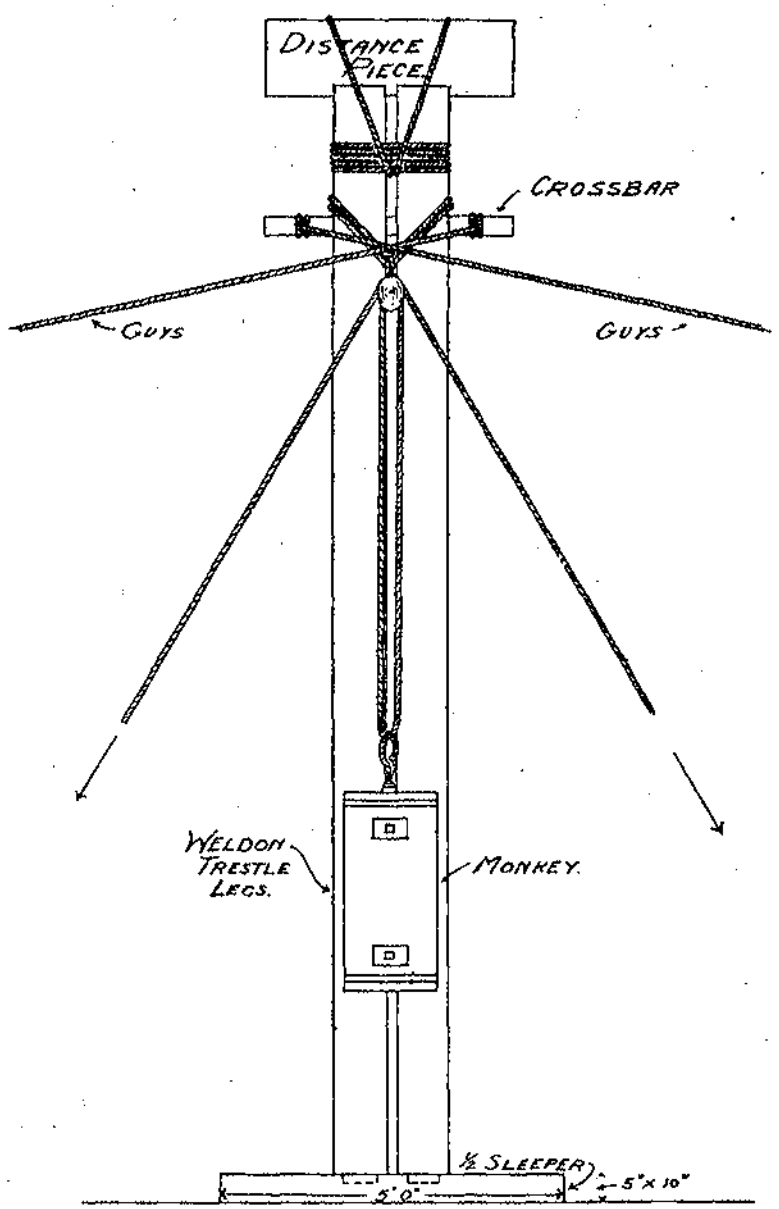

FRONT ELEVATION.

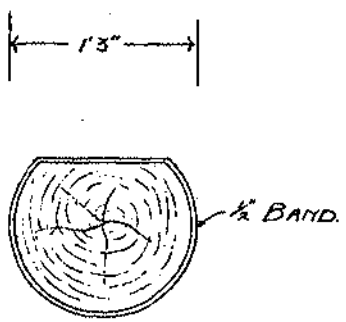

MONKEY.

BOLT.

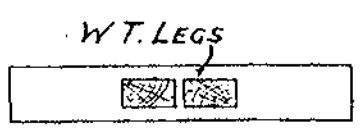

PLAN.

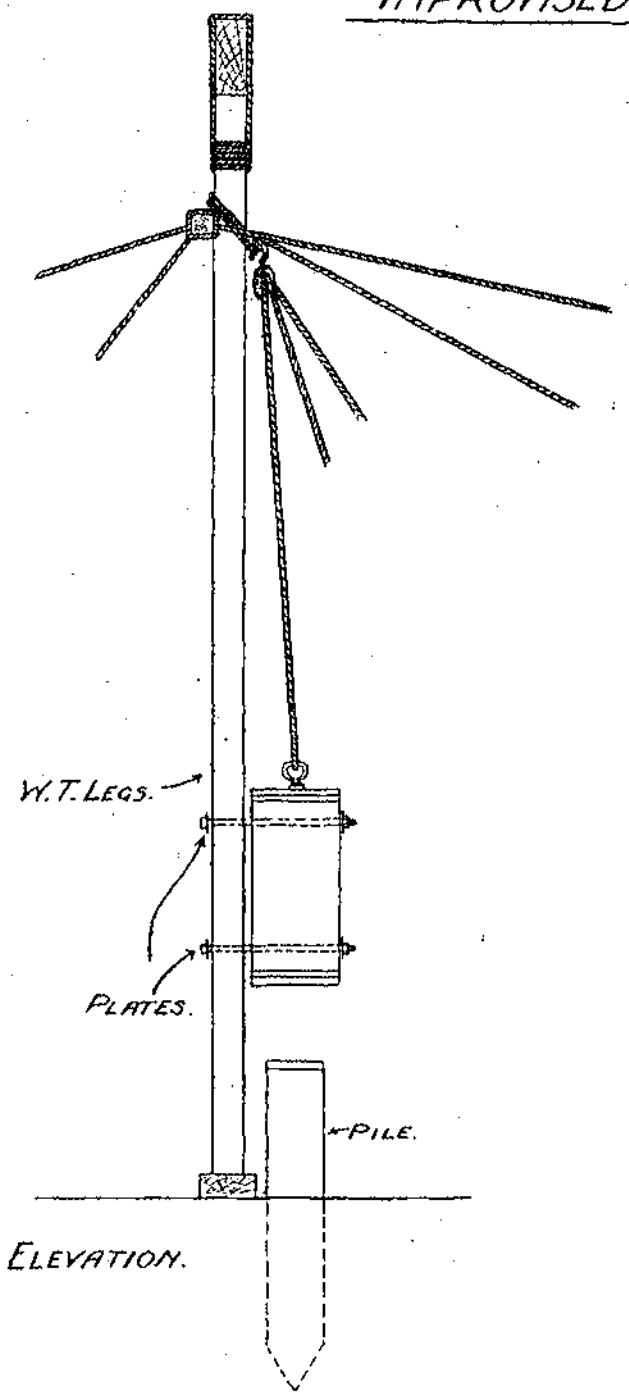

SIDE ELEVATION.

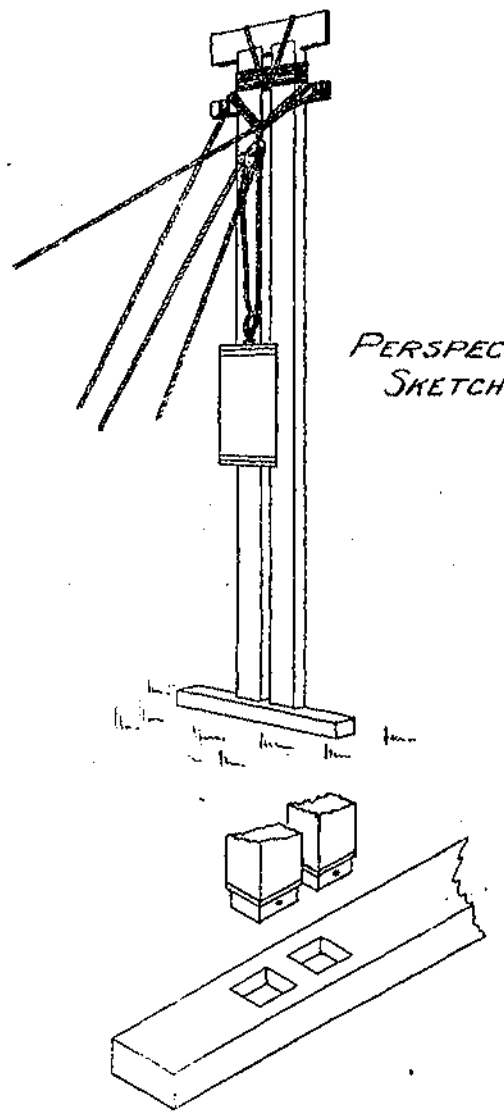

PERSPECTIVE SKETCH.

Photo 1.—Training Works on April 19th, 1912.

Photo 2.—Showing the Area KIH.

Photo 3.—Showing Area LHIF (Connaught Bridge and Chakdara Fort in background).

Training Works in the River

TRAINING WORKS IN THE SWAT RIVER.

By Capt. F. C. Molesworth, R.E.

This article is an attempt to describe certain training works carried out in the Swat River during the years 1908–12, in order to prevent the river from damaging the metalled Malakand-Chakdara road immediately south of the Connaught bridge at Chakdara, N.W. Frontier of India.

This bridge was built in 1901–03 by Lieut. (now Major) H. Biddulph, R.E. A very full and interesting account of its construction is given in Vol. XXIX. of the *R.E. Professional Papers*, 1903. The bridge allows wheeled vehicles from India to cross the Swat River, which is otherwise always impassable for carts, and unfordable during a large portion of the year for men and animals. Its value therefore for ordinary traffic is evident, and it is plain that in the case of military operations N. of the Swat River it would be of vital importance.

The constructional details of the bridge do not concern us, but it is advisable to note a few of the levels of various parts of the structure. The roadway is 2,255 ft. above sea level; bottom of girders, 2,250; tops of piers, 2,248; bottoms of piers, 2,200, except No. 5 pier, which goes down to a level of 2,194 ft.

The Swat rises somewhere west of the great bend of the Indus near Chilas. After a course of about 100 miles, it reaches Chakdara. It is to a great extent a snow-fed stream, and in consequence is much bigger in summer than in winter. Its level in winter may be taken as averaging 2,230 ft. (taken on pier No. 5, *vide Plate* I.).* About the end of March, it begins to rise, slowly at first, then rapidly during April and May, and generally with fluctuations following almost exactly the temperature curve. In June and July its normal level is about 2,236, after which it begins to fall, until in October its normal winter level is reached. Floods, raising the level by 4 or 5 ft., may be expected at almost any period of the year, but naturally those occurring in spring and summer are most to be dreaded. The highest known flood level is 2,243, in August, 1899; but observations of any kind date back only to the British occupation in 1895, and accurate daily readings have been taken only since the completion of the present bridge in 1903. It is not expected, however, that any flood would rise much above 2,243, which is practically the level of the surrounding country. The water rises extremely rapidly, 2 or 3 ft. an hour being not uncommon; the fall is characterized by what may be

* Readings taken on other piers vary sometimes by as much as 3 ft.

termed "concertina-ing," from the appearance produced in a chart, since the main flood is often followed by smaller ones until the level gradually subsides.

Upper Swat being a closed country, floods occur without much warning, and barometric conditions in the Swat Valley are found to be very misleading.

When the girder bridge was constructed, certain training works were carried out, details of which are given in *Plates* V. and X. of Major Biddulph's article. These, it will be noticed, consisted largely of dry stone bunds (dams or embankments) laid practically on the surface of the ground, it was for this reason that they could never resist underscouring, which is the main danger to be faced. It may be remarked that the trees sown between the bunds grew to maturity in a few cases only; there are now scattered clumps over this area.

As it was, these bunds effectively protected the south approach until April, 1908, when, as the result of a flood (2,242 ft.), the river took a decided set over to the left bank and the wing walls of No. 6 abutment were breached. In August of the same year, a very heavy flood topped and undercut No. 2 bund, and both wing walls were undermined. The damage was repaired, chiefly by means of wire nets, locally known as *jalas*, filled with stones and tied up with thin wire. Some attempts were made to cut channels for the river so as to make it flow between piers Nos. 3 and 4. Some piles were also driven in in front of abutment No. 6.

Not much damage occurred in 1909. The river closed one of the channels, but deepened the other (Middle Channel). However, ½ mile upstream, it was working further and further north in the neighbourhood of Chakdara village, and, impinging from that bank, was coming almost diagonally across its former course and bearing very heavily against the south abutment.

In the hot weather of 1910, further damage occurred. Towards the end of July, a series of heavy floods carried away No. 2 bund for some 200 ft. above the abutment, destroyed the wing walls between the bridgehead blockhouse and the abutment, and so breached the road between these two places. Communication by road was therefore cut between Chakdara and the rest of India. Great anxiety was felt for the safety of the blockhouse, the foundations of which go down to 2,230, and the depth of scour in the channel was very much greater than this. Local labour was, however, procured in great quantity; stones were obtained by dismantling the upper parts of bunds 2, 3 and 4, and further erosion was prevented. A trussed timber bridge was thrown across the gap, and communication was restored. A spur was made out into the stream at the end of bund No. 2, and though this was considerably battered, no more damage occurred below it. The state of the channels during the ensuing cold weather is shown in *Plate* I.

The following works were then undertaken :—

1. A guide bank was constructed from the end of bund No. 2 to abutment No. 6, and from thence to a point 100 ft. below. This bund was 40 ft. wide at bottom, 2 ft. wide at top, and about 20 ft. high. It was made of *jalas* up to cold weather water level, and of boulders faced with *jalas* above that.
2. Middle Channel was deepened.
3. In order to throw the stream into Middle Channel, three strong **T**-shaped bunds were constructed on the left main bank, ¼ mile upstream of the bridge.

The guide bank and bunds are shown chain-dotted in *Plate* I.

In March, 1911, an almost unprecedented rainfall occurred in the Swat Valley about Chakdara. It rained almost without intermission for ten days on end. The floods caused were not of any great severity, but higher up the valley and on the surrounding hills the precipitation took the form of snow, and in consequence the level of the river owing to melting snow was extremely high during the following hot weather, one of the hottest ever known in these parts.

On June 13th and 14th, 1911, heavy rain fell, and the river rose to 2,238·5. The stream, meeting such a powerful obstacle as the **T**-bunds, set to work to get round their shoreward ends, and succeeded to such an extent as to form a new channel (see *Plate* II.) behind them. The stream was now at liberty to attack No. 2 bund higher up than before, which it did with such effect that the junction of No. 2 bund with the new guide bank was washed away, and a raging whirlpool was formed on the spot where they had been.

It was evident therefore that the blockhouse and the communication between it and the abutment were in imminent danger. There was no Garrison Engineer at Malakand at the time, but efforts were made by the Political Agent, some officers of the Chakdara garrison and the local Military Works establishment to keep the flood away from the foundations of the blockhouse, and the flood subsided without any damage occurring.

On the arrival of the Assistant C.R.E. Nowshera District, and of the G.E., it was decided to abandon the old line of No. 2 bund and the guide bank, which indeed was now the centre of a torrent, and to construct a temporary bund on a curved alignment behind it (see *Plate* II.). Time being limited, the bund was made on no definite plan, *jalas* being merely thrown or placed in position, until the height of the remainder of the guide bank and No. 2 bund was reached. There was very little wire in stock at Chakdara, and in consequence application was made to the Telegraph Department, which most kindly supplied a large quantity at once. The greater part of this work was finished early in July.

The hot weather of 1911 was fortunately one of very little rainfall,

and consequently there were no large floods. Underscouring began about the middle of the new curved bund about July 20th; it took a dangerous tilt outwards, which was partly remedied by throwing *jalas* into the stream at the place in question. On the night of August 1st—2nd, there was a flood up to 2,238, and some ten yards of the bund fell forward into the stream; this was repaired in a few days, coolies working night and day for the purpose. On August 29th, the river rose to 2,237·25, without damage occurring. On September 11th, with a slight flood of 2,235·25, another portion of the old guide bank collapsed by sinking gently down into the hole formed below it by underscouring. This, however, was the last damage done. The river was now falling steadily and its normal cold weather level was reached about the middle of October.

Attempts were begun in September to divert the river down Middle Channel again, and for this purpose a bund (not shown in the *Plate*) was made diagonally across the stream on the site of one of the old T-bunds, which had now practically disappeared. The bund was made about half-way across the main channel. Ploughing up the shoals was also tried, but the small native ploughs had little effect on the hard, large shingle, and the experiment was soon abandoned. Attempts were also made to get rid of obstructive shoals by explosives, but it was found that only very small craters, which speedily filled themselves up with shingle, resulted.

The direction of the channels during the cold weather of 1911–12 is shown in *Plate* II. The situation was extremely serious. The main current was pointing directly towards the south approach road, from which it was separated only by a bund, hastily constructed, which experience had shown was liable to underscour, and a few yards of soft loose earth, which would be eaten up by a heavy flood in a very short time. Not only was this part of the road in danger, but the whole 3 miles between Amandarra and the bridge lay close to the river, and a re-alignment further south on expensive rice land might have become necessary: a state of affairs which the lengthening of the bridge by a span or two might not have improved. In addition, a pothole, 15 or 20 ft. deep, had formed just in front of the old guide bank above the south abutment.

The C.R.E. 1st (Peshawar) Division, on one of his inspections, ordered the bank from I to F (*Plate* II.) to be revetted, and this was done by driving in piles, 3 or 4 ft. in front of the bank, and filling the space behind with *jalas* and loose boulders.

A very similar case had occurred at Kalsi on the Jumna in 1904, and the Director-General of Military Works, on receipt of proposals for training works in the Swat River at Chakdara, directed that the G.E. Malakand should go to Kalsi to study the system employed there.

Kalsi is situated at the point where the Jumna leaves the hills. The river is about the same size as the Swat at Chakdara; like the

Swat, it is largely a snow-fed stream. The general conditions are very similar to the Swat, except that on the left bank, which we are considering, the *kadir*, or area outside which the river cannot wander, is bounded by a line of cliff 30 or 40 ft. high, thus differing from the Swat, where the river might wander to an almost indefinite extent.

The Jumna is here bridged by a suspension bridge, 520 ft. long, on the Sharanpur-Chakrata road. In 1904, the flooded river breached the approach road on the south (left) bank, leaving the bridge almost high and dry. It was at first proposed to abandon the site altogether, and erect a bridge elsewhere, but this was objected to on the score of expense and for other reasons, and the matter was put into the hands of the late Mr. Denehy, P.W.D., who devised training works, at a cost of slightly under 1½ lakhs of rupees, which so far have served their purpose admirably.

In the first place, "Bell" bunds (named after the designer) were constructed perpendicularly to the bridge from each abutment. Then a bund was built from the left abutment to the cliff bounding the *kadir*, from which smaller and lower bunds projected upstream, the approach road ran along part of this bund. Thirdly, a large **T**-bund was constructed parallel to the bridge and about 500 yards below it. The main works were all several feet above highest flood level. Where exposed to the action of water, they were faced with masonry, laid in blocks about 20 ft. long, with spaces of about a foot between each, so that the settlement of one block would not necessarily injure the rest of the bund. At the foot of these were laid blocks of masonry about 10 ft. by 10 ft., articulated in a similar way. The foundations went down to no great depth, as the masonry blocks in front protected the foot from scour; these blocks of course had frequently to be renewed, but as a rule they lasted out a whole flood season. Wire *jalas* were used much more sparingly than at Chakdara.

The object of these works was to provide "still-water areas," above and below the bridge, in which silt should be deposited and eventually a firm bank be produced. This end has been attained in a most successful manner.

Now comes the application of these principles to Chakdara. The first desideratum was a Bell bund perpendicular to the bridge, and this it was decided to make in continuation of the old guide bank (see *Plate* II.). The position of the upstream end was fixed by the mouth of Walsh Creek. This gave a total length from the abutment (including the existing guide bank) of 600 ft. Its nose, the most important part, would be constructed partly on the south shore of Martin's shoal, consequently largely on dry land, a very great advantage. The upstream end of this bund was to be faced with masonry, and the toe protected by an apron of masonry blocks in the same way as at Kalsi. Another Bell bund was to be made below the bridge, for a distance of 150 ft., in continuation of the guide bank,

itself 100 ft. long, and in a very good state of preservation at this point. But as the river had shown few signs of getting round this way, it was proposed to leave this part of the work to the last. There was of course no question of taking the foundations of these bunds below ground level. If scour took place the apron would subside, and it would be a comparatively simple matter to rebuild it to original height; thus it was hoped that the main bunds would remain intact. A second bund, at right angles to the first, was, of course, necessary. At Kalsi, this was actually in prolongation of the bridge; but to do this at Chakdara would have meant the abandonment of a large area of cultivable land to the action of the stream. The position HIJ was eventually chosen, 350 ft. from the road. There was no unscourable cliff within easy reach, as at Kalsi, to form a *point d'appui* for this bund; in fact, it would have been necessary to take it about 1½ miles south to get to firm soil; so the Thana road was fixed as the south limit. Beyond this there was a slight rise, and to take it further would have meant the acquisition of rice land at a heavy cost.

Lastly, what may be described as an outpost line was designed. The object of this was to close the upper ends of Edgell Channel and the other channels, and so protect the main works during construction. This line consisted of a series of bunds, beginning at a place on the left bank about a mile above the bridge where there was a low earth cliff, and crossing every channel between there and Grassy Island. From this point a bund was to be built right across the main stream to Martin's shoal, which bund, it was hoped, would have the effect of diverting a large portion of the stream down Middle Channel. These bunds were of slight construction, nowhere more than 8 ft. high and 8 ft. broad. It was not expected that they would stand the summer floods, but it was considered that they would sufficiently protect the bunds nearer the bridge during building. At certain places on this line, as well as near No. 3 bund, trees were to be planted.

The estimate was sanctioned in full by the D.G.M.W. on March 6th, 1912. Certain parts of the work had been put in hand previously, in anticipation of sanction, the outpost line was nearly complete, and a very large stream was already flowing down Middle Channel, also the revetment FI was almost finished.

The first difficulty experienced was in getting labour. Only one piecework contractor was obtained, and he showed a marked preference for bund making on dry land. But a contractor was obtained for the collection of boulders, and the bulk of the actual construction had to be carried out by daily labour. The Political Agent very kindly procured some 250 to 300 coolies from the neighbouring villages—it must be remembered that Chakdara is beyond the administrative border, and that consequently labour for Government works is sometimes difficult to procure. These men were paid eight annas a day.

Work was now begun on bunds IH and KH, by throwing in *jalas* from the banks. The masonry facing was also started on bund HL, materials for which were dumped down from the bridge on to Martin's shoal, and then carried across by coolies. The river, however, began to rise almost immediately. It soon reached the foot of the masonry, and washed out the mortar, which had not yet set, from the interstices. Tarred bags filled with cement concrete were then placed as foundations, and attempts were made to build the masonry on this, but the river continued to rise (a good deal of rain falling in March, and consequently causing floods) and it soon became evident that the masonry facing would have to be left to the next cold weather, the bund meanwhile being constructed of *jala* work.

The progress of bund IH, combined with the rise of the river, now formed a deepish channel along the north side of HL, and made it impossible to convey stones from Martin's shoal. Some rafts of inflated skins were therefore made up, and stones were ferried across from the mouth of Walsh Creek. This method was of course extremely slow.

Bund IH was meanwhile progressing. As it advanced, however, it dammed up the water in the area FIHL, and it became necessary to heighten it continuously, in order to prevent it being submerged. On some days all the available labour had to be put on to heightening it, so that bund-head did not advance by a foot. Moreover, as the space between bund-head and HL narrowed, the rush of water became stronger and stronger, and *jalas* thrown in seemed to be whisked off downstream and lost for good. It seemed as if the gap would never get closed.

Bund KH was meanwhile getting on, for the difficulties were not so great. Progress was slow, owing to the great depth of water (about 18 ft. close in to the shore).

Early in April one or two floods occurred, rising to 2,232·75, and the works were almost entirely submerged, fortunately with little damage.

On April 15th, a bridge was thrown across between IH and HL, which made it much easier to get stones on to the latter ; the service of rafts was forthwith dispensed with. *Jalas* were now lowered into the stream simultaneously from both sides of the opening, which now rapidly closed. At last, on the evening of April 17th, amid a scene of great excitement among the workmen, the two bunds finally met. The level of the river on that day was 2,231·50.

It remained to close up bund KH. This gave little difficulty, as in the middle the water was very shallow.

By now, practically the whole of the shoals in the river bed were under water, and so stones for *jala* work could not be obtained from them ; however, the contractor agreed to procure stones from the hill west of Chakdara Fort at a rate of Rs.3.8.0 per 100 cubic feet.

The D.G.M.W. inspected on April 19th, and sanctioned the substitution of *jala* work for masonry, as a temporary measure. The aspect of the works on that day is shown in *Photo* 1.

Work being now well above water level, it was possible to keep to the proposed sections, and so the upper part was much more regular in appearance than the lower. Bunds IH and HL were completed towards the end of May, and then IJ was constructed. Bund KH was left about 4 ft. lower than the other bunds. Work was finished early in July, by which time the river level was 2,236. It was decided to leave the proposed continuation of the old guide bank west of the bridge for the present, as the river showed no signs of bending round that way.

At first water poured through the bunds with very little check, but, as floating matter collected, they began to pond up the water, until the difference of level on the sides of IH was nearly 4 ft. The area KIH made an excellent swimming bath, for which purpose it was used by the officers of the garrison.

The bund across the main channel was breached by floods early in May, and from that time onward the flow down Middle Channel decreased.

The beginning of July was hotter, it was said, than had been known for 30 years. This accounts for the high level of the water. There was a slight flood on July 5th, due to rain in Upper Swat, and a small piece of the apron at L subsided; this was quickly repaired.

On the night of July 12th—13th, about 3 ins. of rain fell, and as a result, the river rose from 2,237 to 2,240·5 ft. between 7 a.m. and 1.30 p.m. About 2 ft. of this rise occurred between 11 a.m. and 12 noon. This, it will be noted, was 2½ ft. only below the record flood. At its highest point, it reached within about 2½ ft. of the top of bund JH. Bund No. 2 was topped, and the whole area between bunds Nos. 2 and 3 was under water. At one time, the flood got round the end of bund JH at J, and for about half an hour ran along the Thana road in a stream about 6 ins. deep. Most of the area west of KIJ was 2 to 3 ft. deep in water, but this water was practically still, so that nothing approaching erosion occurred. The top of bund KH was just awash.

At the highest point of the flood, practically the whole of the river bed was covered. On the north bank, the water even entered the Station Garden. No damage occurred to the main bunds. A slight further subsidence of the apron at L was noticed when the flood subsided. At 1.30 p.m. the flood began to diminish, and though there was a slight rise later in the afternoon, by nightfall the level was 2,238. Early the next morning more rain fell (at Malakand 6 ins. were registered in six hours) and the river rose to nearly 2,239.

The next three weeks were very rainy, and floods were constant. About this time an island of silt appeared above the surface in the

area KIH. This was a hopeful sign, showing that the still-water areas were fulfilling their purpose.

On July 29th, the river rose to 2,240, a rise of 3 ft. taking place in less than an hour, but falling almost as rapidly. On July 31st and the two following days, the river reached 2,238·5, 2,239·5 and 2,240. The maintenance of such high levels was unprecedented.

Some damage occurred to the revetment between F and I, but the bank behind was not affected. It was noticed that, whereas in the earlier floods the water had swept round the head of L, the tendency now was for the main stream to cross what had been Martin's shoal diagonally, and to strike bund HL obliquely; some damage occurred as a result to the apron along the north side of this bund. The stream in front of L became relatively insignificant, and gave no more trouble.

The flood of August 2nd was the last serious one. The river now began steadily to fall, and by the end of September had reached its normal cold weather level.

The direction of the channels, and positions of the shoals at this time is shown in *Plate* III. It will be seen that the area KIH was almost entirely silted up, and the area LHIF partly so. Silt to a depth of 6 or 9 in. had been deposited over the area between bunds Nos. 2 and 3. A large shoal had formed on the north side of KH, and below this point, where a pothole some 15 to 20 ft. deep had existed the previous cold weather, silt had been deposited to within 2 or 3 ft. of the surface, and the water was practically stagnant. By far the greater part of the current was now running between piers Nos. 4 and 5. Middle Channel had closed up, and North Channel was nearly still, being fed solely from irrigation streams.

Higher up, it will be seen that the outpost line had remained nearly intact, except the long bund between Grassy Island and Martin's shoal which was practically quite destroyed. It will be noticed that the main channel north of these bunds does not approach Chakdara village nearly so close as before.

Tree planting was successful about bunds Nos. 2 and 3, but not so higher up, where the young trees were inaccessible for some months, and so got choked up with weeds.

Although, during 1912, the record flood was not equalled, yet five floods, exceeding the average highest summer flood, occurred within three weeks, and the resulting damage to the training works was small. The results of the first season's experience may therefore be said to be satisfactory. The danger spot, which may now be said to be about L, has been removed some 200 yards from the bridge, and the threatened south approach has been protected by several vertical feet of sand and shingle which it would take a great deal of erosion to get through, and it appears, at present at any rate, that the set of the channels does not conduce to erosion on this side.

The "lessons" therefore of Kalsi and Chakdara may be summarized as follows :—

1. Protection works in the neighbourhood of the bridge are of greater value than those higher up the river.
2. Bunds should be perpendicular or parallel to the stream; oblique bunds nearly always fail by underscouring.
3. Cutting channels for the river is usually a waste of labour.

It is not intended to suggest that these lessons are applicable to all rivers.

It may be added that the *jalas* so often referred to were made up locally with wire ($\frac{1}{10}$ in. dia. was found to be the best, bound with $\frac{1}{32}$ in. dia.) in 6-in. meshes. Each *jala* was 8 ft. × 8 ft., and took eight coolies an hour to prepare.

On October 25th, 1912, the D.G.M.W. and C.R.E. inspected, and ordered that bund KH was to be brought up to the same height as the other bunds.

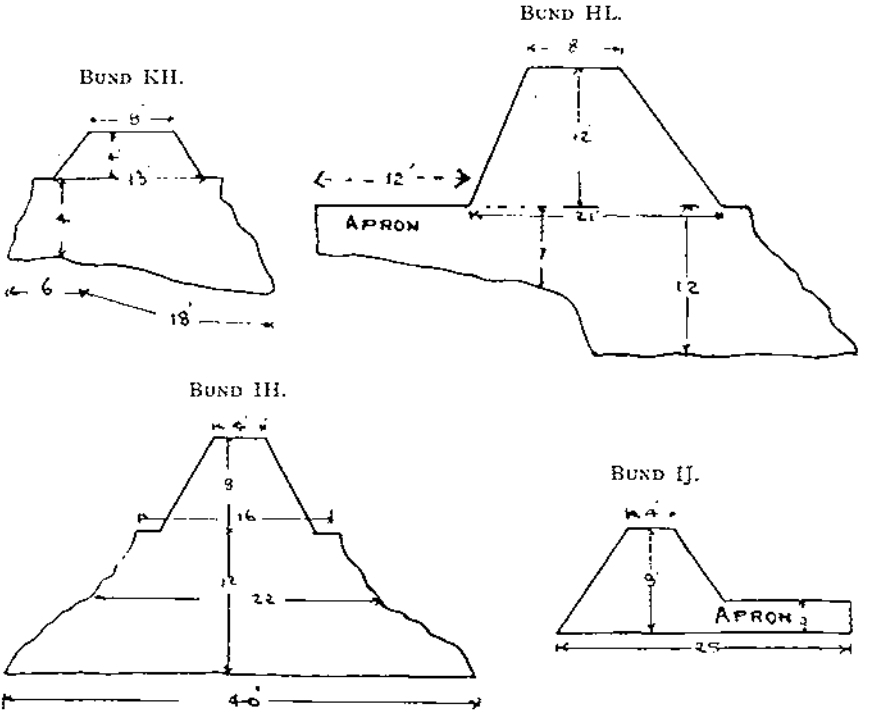

Sections of bunds KH, HL, IH and IJ, as finally constructed, are shown in the above figures. The difference in the regularity of the sections above and below water level (at the time of construction) will be noticed.

The cost of the training works carried out in 1912 was about Rs.70,000.

Photos 2 and 3 were taken in October, 1912.

SWAT RIVER.

CHANNELS COLD WEATHER 1910-11.

PLATE I.

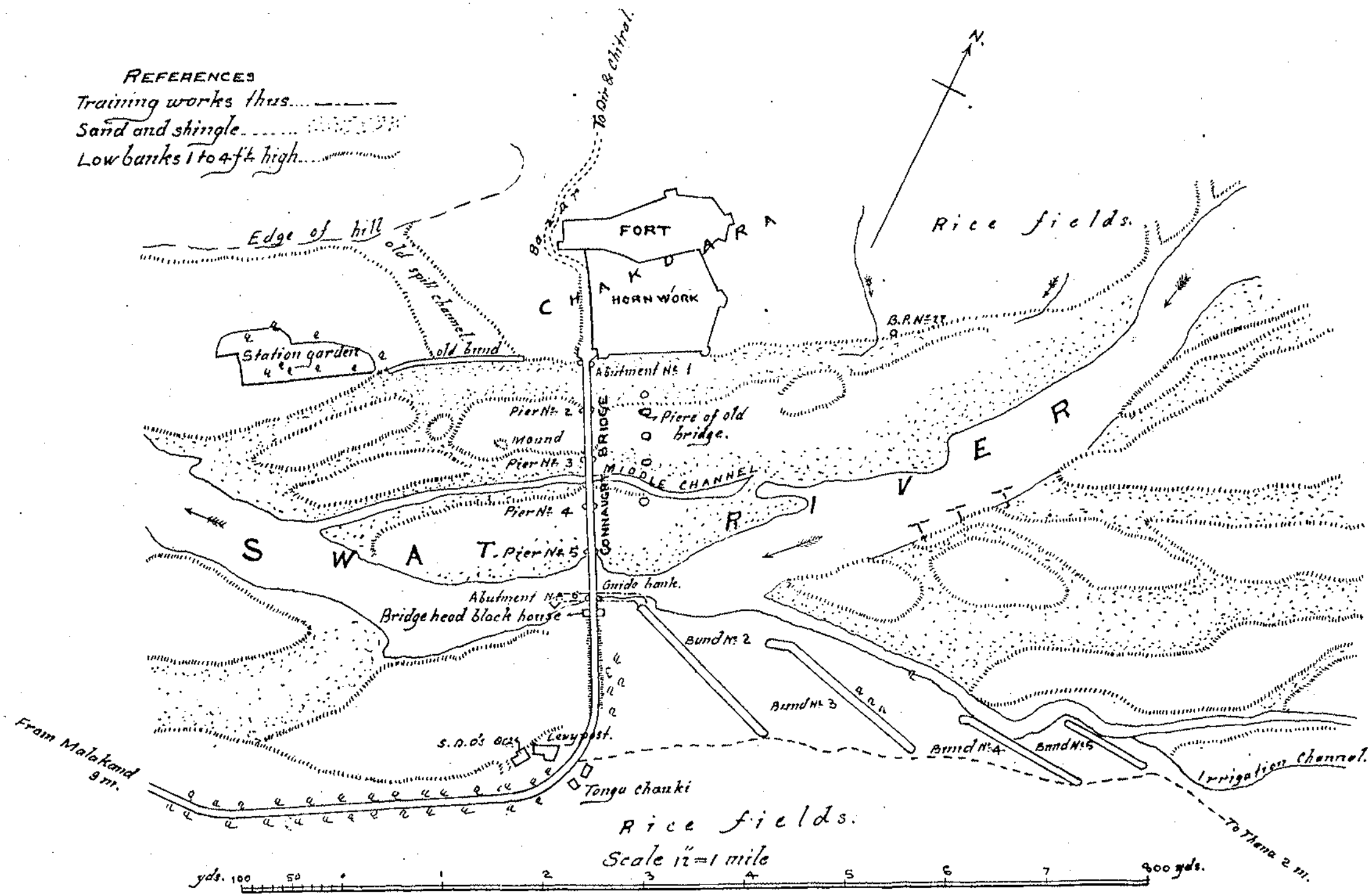

PLATE II.

SWAT RIVER.

CHANNELS COLD WEATHER 1911-12.

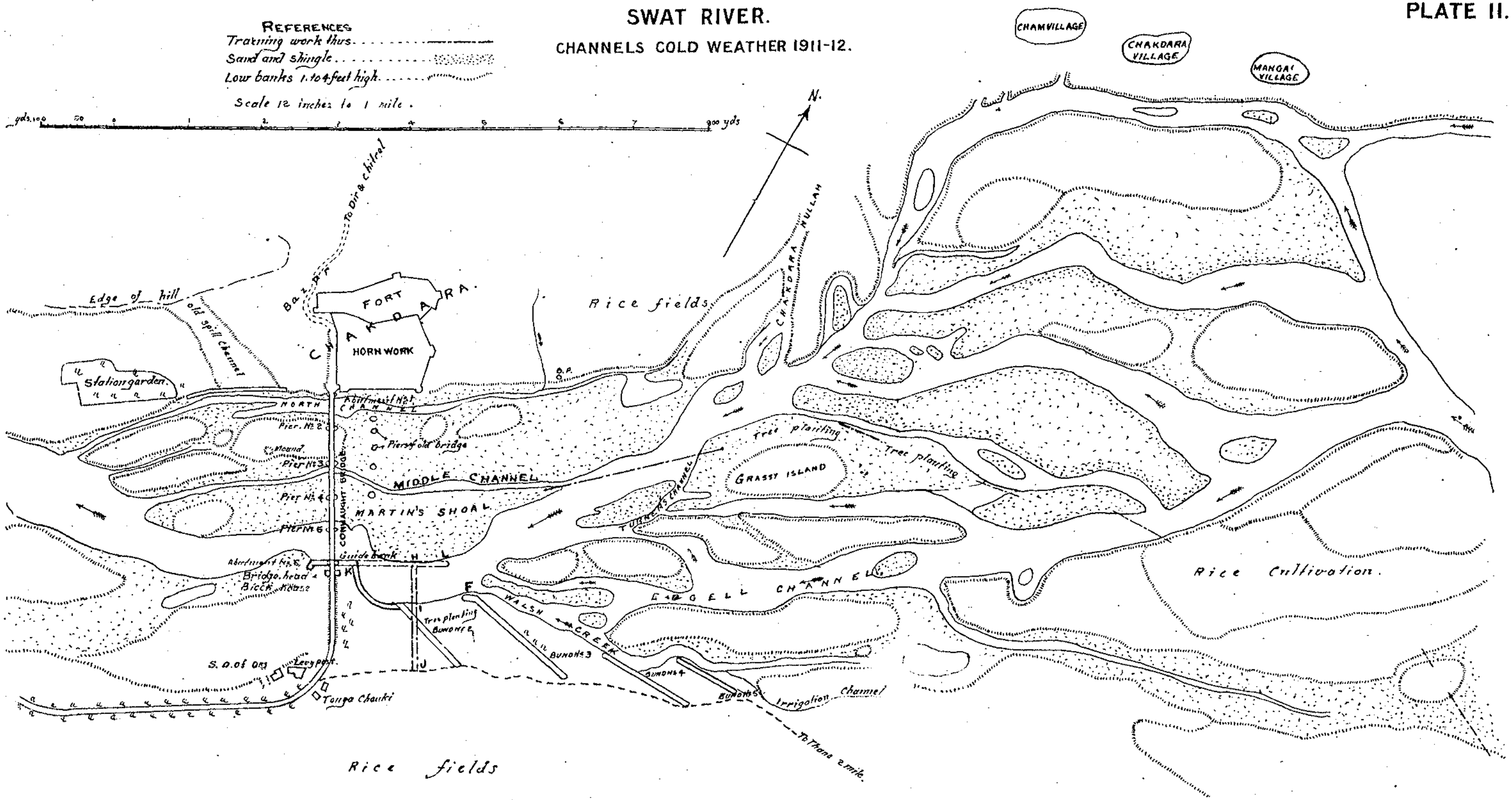

PLATE III.

SWAT RIVER.

CHANNELS COLD WEATHER 1912-13.

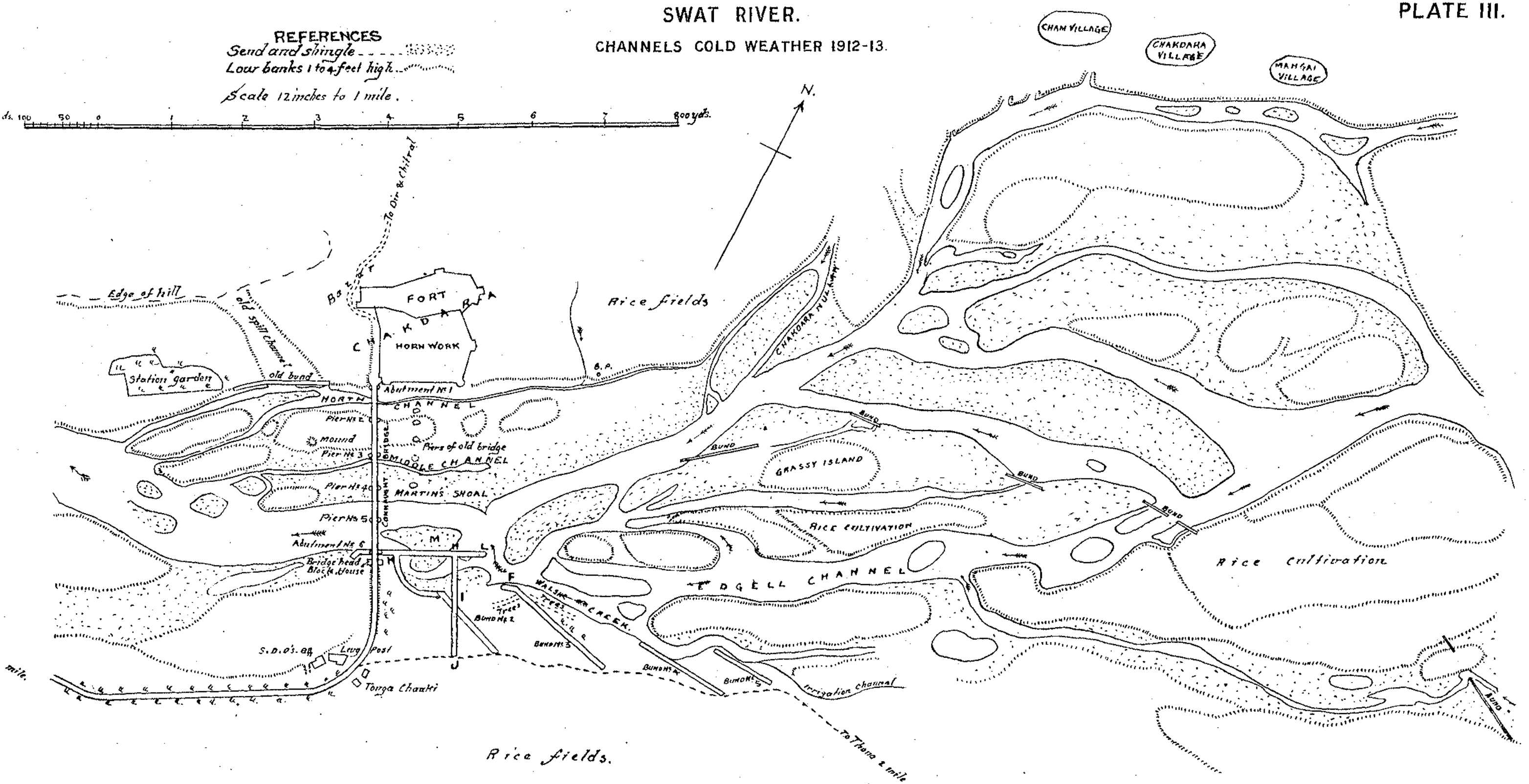

*THE INTERNATIONAL ONE-IN-A-MILLION MAP OF THE WORLD.**

By Arthur R. Hinks, Esq., M.A.

The first sheets of the international map have been published within the last 12 months, some 20 years after the first proposals for its construction were made by Professor Penck at the International Congress of Geographers, meeting in 1891 at Berne. The real beginning of this enterprise marks a new era in cartography; and the study of the first sheets raises at once some questions which seem to me not only of interest, but of immediate interest, not unsuitable for discussion on an occasion when I am honoured by an invitation to address the officers of the S.M.E.

Geographical Congresses may have pious aspirations; they may embody those aspirations in diplomatic memoranda, which approach the Governments of the world through the most august channels. Yet it has happened that such representations will pass over the heads of a government department as unheeded as the time signals from the Eiffel Tower, unless there is installed somewhere in the executive a detector and a capacity attuned to these propaganda.

The Congress of Berne appointed a commission to examine the project, and to report to the Congress of London in 1895. The Congress of London adopted a series of general resolutions in favour of the scheme, and to some extent cleared the ground by agreement on an initial meridian—that of Greenwich—and on a method of dividing the world into sheets. Then the scheme went to sleep for 13 years.

In 1908 it was revived at the Congress of Geneva, and more resolutions were passed. But there seemed to be every chance that these would remain as inoperative as their predecessors, for the Congress had no executive power to carry them into effect. But, very fortunately for the realization of the scheme, the Geographical Section of the General Staff had been represented at Geneva by its Chief; and it will not seem far fetched if we trace a connection between this fact and the realization by the British Government that the proposals would remain inoperative unless officially adopted.

* A lecture delivered at the School of Military Engineering on October 17th, 1912.

The British Government therefore issued invitations to the Governments of the world to send delegates to an official committee, which should discuss the question of standardizing the international map, and should make definite recommendations.

This Committee met in London in November, 1909, and found that the preliminary discussions had so far cleared the ground that it was able not only to adopt a detailed scheme, but to adopt it with unanimity. There was, in fact, only one question which might have been difficult, the choice of the unit for the representation of heights. Divergences in the national units of distance cause no trouble, for it is the easiest thing in the world to provide a map with two or more scales of length. But the unit of height governs the placing of the contours, and one cannot have alternatives. It will be generally agreed, I think, that the representatives of Great Britain, Russia, and the United States did well to accept the metre which must have been used by all other countries.

I do not know that any very definite statement has ever been made of the precise purpose of this map. The scale of one in a million is intermediate between that of atlas maps and that of the smaller topographical maps—a little bulky for a reference atlas, a little small for the purposes of administration or strategy. We may think of it, perhaps, as meant for the use of the systematic geographer, whenever it shall have been determined what is the function of that person, and if indeed he has survived the destructive effect of Colonel Close's address to the British Association at Portsmouth last year. But whatever its purpose, the leading principle of the map is clear. It is to represent the whole world by a uniform notation, every sheet written in the same language, without difference even of local idiom, so that who learns to read one sheet may read them all without rearranging his ideas. One set of conventional signs, one scale of altitude tints, is to serve for crowded Holland below sea level, for the spacious plateau of central South Africa, and for the terrific region which bounds India on the northern frontier. It was a bold conception, that these diversities could be brought within the grasp of a single characteristic sheet. When we remember that three years ago there was no example in existence of an elaborately colour-printed map on this scale, we may admire the courage of the committee which adopted a whole series of binding resolutions; but we cannot admit that discussion is closured.

On the contrary, I would submit to you that this is the epoch at which discussion may begin with profit. Five sheets of the map are now published—two by the Ordnance Survey, of northern Scotland; two by the Geographical Section of the General Staff, of European Turkey and of N.W. Cape Colony respectively; and one by the Service Geographique de l'Armée, of N.E. France and adjacent countries. I will ask to be allowed for the moment to treat

these sheets as experimental, not definitive, and to discuss the measure of success achieved in view of the restrictions under which they were produced, the restrictions, I mean, of an inelastic set of rules giving little scope for modification to suit the peculiarities of each sheet.

Let us begin by noting the points in which they have scored a conspicuous success. There are two at least—the styles of the lettering, and the spelling of the place names.

Many attempts have been made to distinguish between features of different kinds by differences in the character of the lettering which is attached to them; and many of the attempts have failed because in the effort to obtain distinction of character there has been a sacrifice of legibility. The use of "Roman" for towns, and of so-called "Egyptian" for physical features such as capes and mountains, makes a clear distinction in clear type. And the characters are solid, not of that evanescent fineness that has been the stupid ambition of too many draughtsmen in the last 50 years. It is to be hoped that in style of lettering these maps will serve as an example to all future cartographers.

The spelling of the place names follows the official spelling of the country represented, not the habitual spelling of the country producing the map. The Italians, it has been remarked, "call Florence Firenze:—so curious of them!" The international map calls Philippopolis Plovdiv; the Dardanelles are Ak Deniz Boghazi (with the more familiar name in brackets as a help to the infidel); the sheet margin gives a glossary for the pronunciation of Rumanian, Turkish, and Bulgarijan; for Chinese names we are promised the system of transliteration adopted in the post and customs service; and it is supposed that the Ordnance Survey will publish a guide to the pronunciation of English, Welsh, Scottish, and Irish place names in four or more volumes. These niceties lend a scholarly air to the map, and make each sheet a liberal education.

A hard-and-fast division of the world into sheets covering 6° by 4° must necessarily produce many awkward cases of separation. England suffers especially because she has the honour of providing the initial meridian, which puts London on the edge of a sheet; and also because in the relatively high latitude of our islands, while the longitudes have shrunk so that the 6° are in breadth little more than two-thirds of the 4° in height, we just fail to come under the rule which allows a doubling of the longitude extent north of 60° in latitude. The effect on the north of Scotland is disastrous: the Western Hebrides are relegated to a separate sheet which is nearly all sea. The Shetlands, north of 60°, will grace the southern edge of a sheet twice as broad as the north of Scotland sheet. We

may be allowed to think that each map-producing country should take the liberty of interpreting the rules for the sheet margins in a broad spirit, allowing even considerable overflows wherever they seem to be desirable. Kent and Essex appear on the Paris sheet, but that does not seem to be sufficient reason why they should not be shown also as overflows on the adjacent English sheet.

Experience of another international enterprise which need not be specified seems to me to point to the following course of events as normal :—

The first congress draws up an elaborate plan, devised very largely by people who are not going to do the work themselves. This plan is made binding on all participants, in the most solemn and formal manner.

Some years later a second congress meets, and some of the members have experience of what happens when they have got to work. Further resolutions are made, with this difference, that participants are advised to follow them as nearly as possible.

A third congress meets when the scheme is really under way. It quietly approves and adopts many of the deviations from the letter of the law which experience has taught to be desirable ; and for the future it agrees that if anyone wishes to depart from the rules, no one will try to stop him. His blood will be on his own head.

But do not suppose that those pie-crust resolutions were futile. They played an indispensable part, in getting the enterprise started in an orderly manner. When they began to press they were lifted or cut ; and that, we anticipate, will be the future of some of the resolutions which were passed by the International Map Committee in 1909.

The resolutions in question are those concerned with the representation of the relief of the ground : the real difficulty in the production of a topographical map, and one of the most interesting problems which I have met. Moreover, it is practically a new one, for before the days of colour printing the methods were quite different and the possibilities far less. Within the last few years great improvements have been made in colour-printed maps, especially in the application of the layer system of colouring, and the productions of the Ordnance Survey and the War Office rank high among the successes in this field. But we may note that the hitherto published series of maps on the layer system have been mostly on scales from 1/100,000 to 1/250,000 and that no 1/M layer map had been produced at the time when the International Map Committee decided that their map should be coloured in hypsometric tints. If, then, we find reason to think that some things might be improved on this map, we ought not, I would submit, to appear vain critics of the *chose jugée*, but rather as men having a keen interest in first experiments in a new field.

Whatever additions may be made, the basis of the precise representation of the relief must be contours. The resolutions of the Committee provide that

> Normally contours shall be drawn at vertical intervals of 100 metres reckoning from sea level. But in very hilly districts the contours may be at larger vertical intervals, provided that they are spaced at 200, 500, or 1,000-metre intervals. In very flat country additional contours may be inserted, provided that they are spaced at 10, 20, or 50-metre intervals.

In the four sheets published the contours are drawn as follows :—

Highlands.	Paris.	Istambul.	Kenhardt.
100	100	—	100
200	200	200	200
—	300	—	300
400	400	400	400
—	500	—	500
600	600	600	600
—	—	—	700
800	—	800	800
—	—	—	900
1000	—	1000	1000
—	—	—	1100
1200	—	1200	1200
—	—	—	1300
—	—	—	1400
—	—	—	1500
—	—	1600	1600

The Highlands sheet breaks into the 200 step very quickly: around the lochs of the west coast there is barely room for the 300 contour, and still less for the odd hundreds of higher denominations. The Paris sheet keeps to the regular hundreds, but makes no use of the suggested intermediate contours for the flat lands, though this sheet shows a good part of Holland, and nearly all Belgium. The Istambul sheet works in units of 200, thereby representing great stretches of country as featureless plain; also it transgresses the letter of the rule by making steps of 400 in the upper reaches, being driven to do so by an inconsistency in the official scheme. The Kenhardt sheet alone of the four progresses regularly by steps of 100 metres throughout, being able to do so by the nature of the country: high plateau, for the most part, but without excessively steep slopes needing very close contours.

Probably the Istambul sheet would be improved by the insertion

of the 100 and 300 contours. For the remaining diversities there is good reason: good, at least, so long as the layer system of colouring is obligatory.

Turn now to the application of the layer system on the different sheets. Without the aid of colour it is difficult to express the significance of the variations we find; but roughly the results are as follows:—

Colour.	Char. Sheet.	Highlands.	Paris.	Istambul.	Kenhardt.
Green	0—100	—	0—100	—	0—100
Pale green	100—200	0—100	100—200	0—200	100—200
Palest green ...	200—300	100—200	200—300	200—400	200—300
Palest yellow ...	300—400	—	—	—	300—400
Pale yellow	400—500	—	300—400	400—600	400—500
Pale brown	500—600	200—400	—	—	500—600
Light brown ...	600—800	400—600	400—500	600—800	600—800

Thus the Paris and Kenhardt sheets follow the strict rule in having three shades of green, up to 300 metres; but the Highlands sheet has two shades of green, stopping at 200; and the Istambul sheet has also two shades, but stopping at 400.

In the yellows, which should be in two tints between 300 and 500: Highlands has none; Paris has one, 300 to 400; Istambul has one, 400 to 600; Kenhardt is correct.

By the characteristic sheet the brown tints should begin at 500 m. In the Highlands they begin at 200; on Paris at 400; on Istambul at 600.

We shall not, I think, be wrong in saying that in uniformity of application the layer system on these sheets has not been a success.

It is perhaps open to question whether there was real necessity for quite so much diversity as has appeared in the treatment of these lower layers, and it is a pity that for these first few sheets the rules were not in all cases carried out strictly, regardless of consequences. This may be regretted, I mean, from the point of view of a scientific experiment; its effect on the appearance and saleability of the sheets is another question, with which, as topographers of an experimental turn of mind, we are not concerned.

But there can be no question, I think, that in mountainous country, even in the not very formidable mountains of the Highlands, the layer system is a complete failure for 1/M maps. To develop its effect a strip of any one tint must have breadth; a strip less than 4 or 5 millimetres broad, enclosed between brown contour lines, loses recognizibility as a tint, and merely confuses the contours. The Highlands sheet shows this very well. Though the contour interval is 200 metres the horizontal distance between contours is

less than a millimetre in many regions of the map; the gradations of tint are obscured by the contours; the contours are obscured by the tints; and the result is a weak effect of no solidity.

All this is due to a principle which in other matters is well understood. If one wishes to produce a quiet and unobtrusive effect in dress one wears a coat which, when magnified, proves to be compounded of several violent colours in small doses. In gardening the sure way to produce a dull and undistinguished effect is to mix several varieties of tints. The same principle demands that the layer tints of a hypsometric map shall be in broad stretches, not in narrow interlacing strips, if any effect but that of effacement is desired. Yet it seems that this principle was overlooked when it was decided to make the 1/M map a layer map.

Consider the matter numerically. If the scale is 1 in a million, the contour interval 100 metres, how near are the contours together, on a slope of 1 in 10? The answer is 1 mm. But in places where the relief of the ground is the main topographical feature to be represented a slope of 1 in 10 is a moderate slope. It seems then that, if the contours are to be drawn close enough to represent fairly the characteristic shape of the hill forms, they must be of necessity much too close to give the layer system a chance of success.

This defect of the layer system is fundamental. It is quite good for ground of very moderate relief, as was seen in the early sheets of the O.S. half-inch map, covering the Southern and Eastern Commands. When the sheets of Dartmoor and the Lakes appeared, the effect was generally admitted to be horrible. But the blame was laid on the colour scale, which was much too heavy in the higher layers, and on the hill shading, which confused the due succession of tints. The colour scheme was modified, and the hill-shading omitted. I think that the Dartmoor and Lake sheets on the new scale have not yet appeared; but I believe that we may predict that they will be disappointing because the layers will be too much interlaced and too narrow.

It may be said that the obvious remedy is to increase the contour interval in the higher ground, as is provided in the rules, and carried into effect in the sheets we are examining. But I think that the Kenhardt sheet alone is enough to show that this is a poor solution of the difficulty. It breaks down when the general elevation of the land is high, as in the central parts of South Africa. An elevation of a hundred metres is as topographically significant in the veldt as it is in Kent. The Kenhardt sheet shows the 100-metre contours throughout, but is restricted so much in the range of tints allowed by the rules that most of the map is coloured a strong shade of reddish brown, under which brown contours, red roads, and blue rivers are equally obscured. No scheme can be pronounced a success, I would

submit, if it requires that broad stretches of the map should be heavily coloured, to the obscuration of detail.

We are faced, then, with two separate difficulties in the application of the layer system, its ineffectiveness when the slope is steep, and its crudity when the land is high. Let us consider them separately.

Wherever the slope of the ground is as steep as 1 in 25 its form is perfectly represented by contours, without layers. The layers are wanted in the shallower relief, where the contours are so widely separated that the eye cannot follow them readily. Let us see if anything can be done by confining the layer colouring to the shallow relief, and representing the steep ground by contours alone. This is not without something of a precedent, though not a close one. The Swedish map on the scale 1/100,000 has hachuring on the shallow slopes and contours on the steeper ground.

If this plan is to be tried it seems to require that the contour lines themselves shall be drawn in various colours; a device that has not, I think, been attempted up to the present. If it were possible to colour our contour lines on a finely graded system of tints like the layer system, nothing more could be desired; but this of course is not possible, because small differences of colour in a fine line cannot be appreciated, especially when the lines are isolated. But when the contours come close together their colour becomes appreciable, without interfering unduly with the legibility of names and detail. I would ask, then, if it is not worth while to try an experiment on this plan, perhaps as follows:—Adopt the colour scale of the international map as far up as 500 metres, that is to say, in the green and yellow; retain the layer system up to this point, but make the contour lines in these levels respectively green and yellow also. Above 500 metres turn the colour scale into orange instead of brown, and continue it through red, purple, and violet, allowing 1,000 metres for each colour. This would take us up to 4,500 metres, and provide for the greater part of the world. Above that height we might run into grey for rest. And it is very probable that a light grey shade with oblique light in the steeper country would add materially to the effect, without obscuring the comparatively small amount of detail in names that is found at those altitudes.

Now for the case of the high plateau. With the colour scale suggested there is no reason, except cost, why very light shades of the orange or of the red should not be applied as layers where it was desirable. In the Kenhardt sheet, for example, a pale orange tint, with stronger orange contours, would be much less obstructive to the general legibility of the map than the strong brown that at present covers it. As for this brown, I believe that it will be found on more extended trial that the adoption of brown was a mistake. One wants especially transparent colours, and this brown is not transparent.

Moreover, it is contended that the layer system is the greatest success when the tints of the layers follow the order of the colours of the spectrum. It is even contended that there is a physiological reason why a transition from green to yellow is more agreeable and less violent than a change from green to orange or red. Whether or no this is good physiological optics, it certainly does seem to be borne out by experience that a progression in this spectral order is a good one. By far the most beautiful and effective layer map that we have is the 1/250,000 map of the Bavarian General Staff, in which this spectral order is more or less followed, though the purity of the colours still lacks something of the spectrum purity. The yellow is rather brownish.

When we have to deal with a high plateau it seems to be absurd that the rules require us to cover the whole sheet with a heavy tint of colour, which is giving us very little information for a great deal of obstruction. Some little while ago I ventured to suggest that in these cases it might be sufficient to run a band of the layer tint along the contour, leaving the remaining space between contours clear and unobstructed. I did not find that the idea commended itself to anyone else; and I am thinking now that it would be applicable to comparatively few cases. A high plateau is after all not often very flat; and it seems to me on the whole that the variously coloured contours here suggested as the standard way of printing contours for the whole map is the plan most likely to succeed. As to its cost, we are likely, I am afraid, to hear something from those who have to do the best they can with strictly limited funds.

Leaving now this most interesting but complicated question of the relief, let us look for a moment at other features of these sheets of the 1/M map. The roads, according to the characteristic sheet, are to be in red, in four different classes. In practice it is found to be impossible in a thickly settled country to show all these roads, and the Paris sheet frankly omits all but the roads of the first class. The Highlands sheet shows two classes of roads fit for wheeled traffic, and very occasionally a track not so fitted. But it is clear that the greater part of these tracks are necessarily omitted, and their omission leaves the reader with an exaggerated idea of the pathless state of Scotland. The red colour of the roads cannot be pronounced a success. On the green it looks poor, and on the brown it almost disappears. On the brown also a third-class road, denoted by a single red line, is suspiciously like a brown contour. It will be found, I think, that the red roads will be replaced by some other colour and it is possible also that the traditional double line will disappear. It would be interesting to experiment with grey roads.

Time fails us to discuss the many other interesting points that arise when we begin to use these admirable maps and consider how far the aspirations of their projectors have been realized. If we have been critical, the criticism is meant in none but the kindliest spirit. Should it be held that any criticism is beside the mark, because the scheme of the International Committee is adopted and binding for better or worse, then we must admit that, with slight exceptions, these sheets carry out in an unexceptionable way the rules laid down by the Committee. But the whole point of my remarks this afternoon has been that the rules must not be so treated. They were not made by the Medes and the Persians, but by a committee of scientific map-makers, who will be the first to admit that in these matters you cannot tell till you try, and that no *a priori* scheme can pass altogether unscathed through the test of experience.

If we grant that the scheme is still open to amendment, then I would urge that now is the time to discuss and to experiment. The subject of colour-printed maps is a fascinating one. It is still very young, and it has before it a brilliant future. I shall be happy if these remarks, prompted by an enthusiasm for the subject, but unfettered, as you will have seen, by any precise appreciation of the difficulties of technique, perhaps suggest to more competent cartographers one or two directions in which experiment would be interesting, and I believe fruitful.

THE DIARY OF TWO NOVICES IN NYASALAND.

(*Continued*).

By Lieut. J. Benskin, R.E.

Tuesday, 13th September.—Fish's foot was so bad that he stayed in camp and nursed his blisters. There was a thick white mist when we left at 5.30, so we walked in a straight line hoping to pick up fresh spoor and within a mile of camp found fresh traces of wildebeest. Luckily the air soon cleared, and we found ourselves right on top of a herd of hartebeest and wildebeest. After a good long stalk I knocked over a fair-sized wildebeest bull, and then got carried away by the desire to hit, buck fever they call it, and twice wounded another one on the move. Ndala, the hunter, promptly gave chase and all my shouts to make the idiot stop only made him run the harder so that he kept the animal, which was wanting to lie down, on the move for half an hour. When I did get up to the gnu and could again fire and finish it off I found that much to my disgust I had killed a cow. In the far distance there were some sable, and I got a good-sized bull just under 40 in. along the horns, which is quite fair for Nyasaland. A little way further on I came upon a most amazing collection of spurwing geese, sitting out on the open dambo. There must have been over a thousand of them, and as I approached they got up in fifties together, 200 yards off, and flew towards Lake Chiuta to the north.

Zebra also were visible, and John and I were just beginning to follow when we saw far away and faintly visible through the quivering mirage of heat haze a solid clump of 40 to 50 herd of game. White tick birds were hovering above the herd, and on looking at them through the glasses they proved to be buffalo. John agreed with me, so a chit was written with a bullet as pencil, and I sent off Simbota to make Fish come out at once. The buffalo were slowly approaching us and drove John and myself back about a mile before Fish arrived in an improvised machila. There was hardly any cover, just one belt of long grass up to which we hoped to get and there wait for the herd which might approach. It took us quite a quarter of an hour to reach, creeping over most painful grass stumps and swallowing huge mouthfuls of black ashes. The herd was behind the long grass and we could not see them. At last we reached the clump and cautiously pushed aside some grass to see out the other side, and there we saw,

still leisurely grazing, not a mighty herd of buffalo but a herd of wildebeest with a few sable. The heat haze had deceived us. Fish was so upset that when he fired at one of the sable he only managed to wound it, failed to get it in the end and went home disgusted in his machila; I was luckier, for on the way back I finished my day by killing quite a nice reedbuck, rather a brutal act as the cow with two youngsters were standing by.

When we reached camp we found our small island covered with about 50 women and children from a village 10 miles off, who were making a terrible noise and bathing in our water, so we packed the whole lot off straight away whilst they moaned about lions and the dangers of the night.

Wednesday, 14th September.—Having had a bad night I sauntered about camp—trying to snipe marabou, without success, in the morning—and in the evening watched some wildebeest and reedbuck from less than 100 yards off. A big pau squatted 20 yards off me, but I did not shoot at anything as all the beasts were nice to see.

Fish was feeling jealous of me so he went off at 4.30, and the early rise so upset his nerve that he did nothing but wound animals all day, although he is really an exceptionally good shot. He hit a hartebeest, a sable and a bull buffalo, all of which he followed till he lost the spoor; but he finally brought back a wildebeest.

John seemed to have played much the same tricks with Fish as he had with me, ran him off his legs to within 15 yards of the beasts, when the one big bull was hit, and then went crazy, imagined he was a cattle drover and rushed shrieking at the herd trying to drive it on to Fish. It was very bad luck not getting any of the wounded creatures, but only to be expected if Fish would play such unexpected tricks with his constitution.

Thursday, 15th September.—After his previous day's work Fish made up for lost time and slept until 11, went out and got a good sable. I unsuccessfully tried to find and claim some of his wounded animals, and killed a sable cow.

There was a big grass fire burning close to camp and it was great fun watching all the birds of prey squatting on the edge of it catching small creatures as they came out. A lucky shot of mine killed two marabou with one bullet, which made my reputation as a marksman, and the boys would trust me anywhere after that.

Friday, 16th September.—Nabwasi was beginning to become tedious and so very unhealthy that we moved on to another tiny island of rock and trees, named Nafisi, 5 miles off. On the way we crossed quite fresh spoor of buffalo. Luckily John was with the Tenga-Tenga so we felt comparatively safe and followed it up into some longish grass. For half an hour we meandered about in it trying to locate the creatures, until the tick birds were seen and we at last saw the two bulls' backs in a place where the grass might have been

worse. It was Fish's shot, so he took a steady aim, tried to press the trigger and nearly broke something until he grasped the fact that his rifle was at safe. Meanwhile the bulls wandered away into cover. This time we did not need John to lead us on to glory, we both dashed after the creatures and Fish just knocked one over with a shot which I followed up with another hit. The bull got up and was again in cover, nasty unsafe thick grass this time, whilst his pal vanished the other way. I have never known Fish to be so courteous and unselfish as he became on that occasion. "It's your beast, old man. You hit first. Go on and finish it. You have all the luck," said he and turned to go home. But I knew my duty and replied "No, Fish, you cannot fail to recollect that the Acting Governor only gave us permission to slay one bull buffalo apiece. Much as I appreciate your kindly thought, I must refuse, and can only most reluctantly remind you that you would be doing me an unkindness were you not to claim that wounded buffalo. I might be arrested if I shot it." He had to go in, and with one clean shot killed it as it rose to go for him. He was a very fine bull, of greater spread than mine, but fairly young and the palm in front was comparatively small. Whilst tying the knot in his tail and cutting him up we suddenly heard a rustle in the grass quite close and found his mate returning to find out what had happened; so we stood on guard and were not again disturbed.

All this had taken time and although Nafisi was only 5 miles off we had to tramp through the heat of midday, for the most of the way through 18 in. of swamp where we saw several egrets. Nafisi turned out to be so infested with mosquitoes that we decided to move on again the next morning.

Saturday, 17th September.—Ndala had been left at Nabwasi in charge of the heads with orders to follow on. All of his friends who had joined us from Mtalala as bearers had already deserted, having eaten enough to last for a month, and we were so anxious about him that we never made a start until we saw his movements across the plain.

Chipolonga was to be the next camp—the open dambo was to be quitted and we were to again try our hands at shooting in the bush. Simbota tried to lead Fish and myself, and after walking 6 miles into the bush politely admitted that he had no idea where Chipolonga and he himself were situated. Camp was discovered late in the evening, when we had walked 18 miles, and it was an unfortunate moment for Ndala to have appeared begging for a presenti. He had been useless as a hunter, and the centre of constant trouble, so he was dismissed on the spot and never seen again.

Sunday, 18th September.—Chipolonga was about 5 miles to the west of Lake Chiuta, and not far from Mount Chegomani. The village was one of a long straggling native settlement, whose chief

had appeared in search of presentis, and in return for them the information that Lake Chiuta could be crossed dry foot by walking on the backs of the ducks and geese. We hardly believed the latter part of the tale, but were glad when promised two guides who would lead us to a spot quite "pafupi" where two canoes could be obtained and which at least suggested water. Having bicycled 7 miles we reached a bleak stretch of water at the edge of which our guides sat down beside some onlookers, said nothing and waited. Assuming that something was going to happen we also waited. Presently we asked "Is this the place?" "Indeo! yes indeed!" "Where are the canoes?" "They have gone." "Where are the duck?" "They have gone." "When were you last here?" "Three months ago?" And four months ago a fisherman, since dead, had owned a canoe and some duck had been seen. The episode was merely representative of the natives' minds and their determination to give immediate pleasure at any cost. We were learning.

We silently reached our tents just as it began to rain—the first shower that we had had—and pondered over the immorality of shooting on Sundays.

Monday, 19th September.—Eighteen miles ahead we arrived at Nyanezi, a charmingly pretty spot, with a waterfall and great overhanging trees and ferns. The road had been only about 2 ft. wide and very bad in places, so we had runners ahead of us to give warning and carry the jingas if too bad. Expert as we were becoming at taking headers over tree stumps and at wild plunges into the jungle we found that we could not keep up with the boys. There was nothing to shoot and we only saw old eland and kudu spoor.

Tuesday, 20th September.—A 20-mile journey towards Fort Mangoche, starting at 6 punctually, brought us at 12.30 to Cheanombu. Our guides led us in circles through the hills and showed the usual native inability to go straight to the point. The camp was close to running water and at the foot of the Fort Mangoche Hill. At 3 o'clock we visited a Swiss White Father or rather Farmer with a big estate—and were most cordially received by him and given invaluable information. He knew the Portuguese country, the boundary of which was only 4 miles off, as well as any man living and stoutly maintained that the land was not worth a visit.

Staying with him was a German professional hunter who had just spent two months in that very district, and who now found himself landed up country without a penny in the world. Apparently he had allowed himself to be beguiled by that very same individual who had nearly attracted us on first arrival at Chinde. The tales of countless elephant had proved too much, and the trickster had been allowed to take the German for some exorbitant fee in his boat from Fort Johnston, and to use that local knowledge which alone could produce a Portuguese licence. When under way he had found out

that his licence was only available for one small 10-mile square plot of the many Portuguese districts, and during the whole two months he had never seen an elephant spoor. We had indeed been lucky, and promptly decided to make for Fort Maguire where we knew that elephant could be found.

Wednesday, 21st September.—Twenty-two miles along an excellent but hilly road to Natchiwali, just south of Uzuzu Hill and on the way to Malindi, proved rather trying for our boys who gave trouble on arrival. After a bit of palaver they tumbled to good manners, and by then we knew how to treat them. We came to the conclusion that every native is rather a snob. They seemed to notice every little action and always knew if a man were a gentleman or not, but would, I think, have been inclined to overvalue money. To have punished a boy violently would have been a great mistake. John innocently gave us a tip for behaviour one day by referring to us as being great visitors in comparison to the boma people who lived in the country; so we acted on the line of treating the law as our servant who would punish if necessary, and in addition always tried to be if possible humorous. The fact that we were soldiers carried much weight.

Thursday, 22nd September.—"Lake Nyasa, I presume," said Fish on first seeing the stretch of water 10 miles ahead of us and in recollection of the great missionary who had lived and died at the foot of the mountains down which we were climbing. The scene was beautiful and perhaps improved by the difficulty one had in finding any place sufficiently clear of trees to let one have an entirely uninterrupted view. Monkey Bay, with its background of downy mountains, could be seen across the blue water, and all to the south and at the foot of the steep hills lay the flat plain, a light green carpet of trees sweltering with heat and only broken by the Shire River flowing through Fort Johnston and ultimately on to the Zambezi and the sea. It was too steep to bicycle so the jingas were packed on to the boys' heads and we jogged down hill to a village named Malindi, where we found ourselves confronted by a modern gothic church and a comfortable-looking stone house owned by the Universities Mission. Lunch with the architect of the church proved most interesting, as Mr. George was also architect of that world's wonder, the cathedral on Likoma Island. Considering that every bit of the work had been done by natives trained by the mission, the result was extraordinary. Decoration had not been forgotten and the church had a handsome reredos and pulpit, carved in correct religious fashion in wood and soapstone.

The road along the edge of the lake was excellent, 10 ft. wide and on hard ground, some 300 to 400 yards clear of the sand which the natives had chosen for their villages. Eighteen miles were covered that day to Pitakalanji where Fish killed quite a nice

bush buck. The road was too closely packed with villages for one to hope to be able to get much sport along that shore, and I only saw a few small buck running away in the bush.

Friday, 23rd September.—At Pitakalanji we varied our amusements by taking two native dug-out canoes and having a try after a mixed bag of hippo, crocodiles, pelicans and duck. A dug-out is at best an unstable vessel, and when the wind rose it became quite impossible to take a steady aim with a rifle, so we concentrated our fire on the birds alone. They were far too wary; every villager had a bow and arrow and the birds scattered at sight of the canoes. The lake was very shallow and clear and one could see countless good-sized fish in the water as we were poled along.

Away out on the horizon there were some white rocks, which the boys said were always covered with duck and geese so we went for them. On getting close the white covering turned out to be a solid mass of many hundred pelican with a few flamingoes, which waddled into the water as we approached and paddled away quietly for 100 yards. There were several hippo quite close and we had great fun watching them. My boat was heavier than Fish's, and the boys ran me on to a sand bank across which we must have pushed the canoe for half an hour. They were such idiots in their attempts to push in different directions that I had to get out and do the work myself, whilst Fish, who was comfortably floating, jeered at me and as usual took photographs whenever he thought I was at a disadvantage.

We also were fools that day, for we bicycled from 12.30 to 3.15 in the heat of the day and nearly collapsed on reaching Saidi Mwazungu. The road became very bad and sandy, and on reaching camp we found the tents not up and trouble with the boys again taking place.

Fish was beginning to pride himself by then upon his knowledge of the Chinyanja language and he had a most charming manner of addressing natives with a flow of words which to the uninitiated sounded exactly like the correct phraseology. For my part I only really knew two words—"choka" and "iai," (pronounced eeii) and equivalent to the South African Footsack and Ikona. A wealth of meaning could be put into both words. But Fish would open the book of the language and commence "Njiri ya ku Saidi Mwazungu iri kuti?" in quite correct fashion "Which is the way to Saidi Mwazungu?" As he usually chose one of the half-witted women for his questions the answer was certain to be "Eeiiiii." That made him nervous and he would miss his place in the book "Kodi muli nazo nthiti zingati?" "How many ribs have you got?" And the woman also began to look nervous. And then began that extraordinary flow of meaningless sounds "Pafube mkazi chipolopolo siyanara patari" and finally as the woman was tearing away for her life, some good round English oaths ending up with "choka!" "Clear out!"

Saturday, 24th September.—We held orderly room before moving, and were wondering how we ought to deal with the offenders of the previous day when John informed us that a resident happened to be collecting hut tax near by, so we remanded the accused and ran them in before the proper authority. The resident was varying his duties by killing a hippo as he wanted some hide, but he immediately postponed that excitement and most courteously told off our boys, assuring us that he knew that we would not again be troubled by them. On the whole the boys had been behaving fairly well. James and George had greatly improved, and were far pleasanter now as body servants than they had been at Nabwasi when there had been so much meat about. They stole the usual amount of sugar and jam but we had never lost anything else, and when George entreated me to show my complete confidence in him by letting him carry my pocket knife with the screw driver and button hook in it, I agreed, and gave him also my keys of the tin bockus and the store case which was in daily use, thus putting my final trust in him in the conventional manner of the country. The store box was padlocked one side, but off its hinges on the other so it did not make much difference what was done, yet the boys would always religiously make sure that it was securely locked.

Likoloma—17 miles ahead—was the next camp. In the afternoon we looked for game and I watched a herd of water buck cows quite close to me for some time. They have coarse meat and were therefore spared. Fish came upon kudu and lion spoor but saw nothing living. We had been having grass fires as a protection round our camps at night for some time and so felt fairly secure, particularly as between our tents and the ring of fires lay the boys. Even if the lions had not troubled us the boys had heard them often, and the hyenas had to be kept off our skins and heads. Most of the Nyasaland lions along that shore are too wary to make a noise, and take their victims silently.

John brought us news that he had heard that elephant were at Chelinda for certain, and that we could not fail to find them in the "Forest" as he termed it further north. By forest he meant a bush so thick with small trees that we would have difficulty in getting between them, and not one's accustomed idea of great trees laden with creepers.

Sunday, 25th September.—Just as we were leaving the camp near Likoloma a boy came in to give us ominous news. Whilst we had been safely sleeping inside our ring of fires, the village which was hardly 800 yards off had been visited by lions. Three lionesses and one lion had first killed a woman, and after being driven off by the boys had returned to make a raid on a goat house. The shelter was of the usual native pattern, with double walls 2 ft. apart and a floor raised 18 in. above the ground. The walls and floor and entrance

were all built of stout poles but the roof was only thatched and the whole structure much resembled a native kraal. The lions had forced a hole through the top, killed two goats, mauled several and only gone off with one.

All the villages along that strip of the lake are built on the sand just clear of the thick reeds at the water's edge, and, as a strong wind was blowing, such faint spoor marks as we could see at first were soon obliterated. In one respect this was rather comforting as the tracks had led us to a patch of banyan trees and weeds which was so thick that we could only get through on all fours, and side by side with shot guns loaded with buck shot at the ready. Apparently these lions were famous man-eaters and had a regular beat along that part of the lake, and whenever hungry used to levy their certain toll on each village in succession. Usually they visited the same village for three consecutive nights, so we decided to build ourselves machans above the goat house to tie up a kid and to try our luck. There were two shelters but only one had been broken into ; two rickety platforms were built of poles and leaves above them, and Fish proved lucky in drawing lots for the goat house with the hole. The rest of the day was spent doctoring one or two sickly-looking children and in leisurely paddling about the lake in a dug-out from which long shots were taken at the wily crocs and geese with our rifles.

At 7.30 in the evening we climbed up to our perches, shouted out good night to John and Simbota and began our long watch. The shelters were right on the edge of the scattered village, and mine had one side even touching a house which I knew to be packed with villagers yet never once did I hear a single sound come up from the poor scared niggers. It was a pitch black night and one could hardly see the kid who kept up an incessant bleat every few minutes. An hour must have passed when all at once a terrific hullabaloo and kicking and scraping commenced in Fish's shelter. Evidently the lions were already inside the goat house, but after 10 minutes or so of the clamour there was again quiet, save for a few angry oaths that fell from the tree and satisfied me that the speaker had not himself fallen down.

Nothing seemed to happen at my end of the village until a long lean cat or serval darted out from the grass and spat at the poor little kid till the bleat was stifled to a weak moan of terror. Then the moon came out and I saw a huge black mass plunge through some mealies 30 yards away—a hippo running inland to find some food. And the sameness of the silent watch must have made me doze for I suddenly to my horror noticed that my goat had gone, stealthily seized no doubt by one of the lions. But a long-drawn bleat was once more heard, this time from behind the shelter, and presently the kid could be seen running around and trying to find a way inside to its mother. Then came a heart-burning problem to my mind.

Should I climb down from my safe tree to chase that goat and tie it up again, and in doing so probably scare away the lions, who should by all rights have been 100 yards away thinking about the goat, and possibly about my own valuable body—or should I unselfishly give up all further hope of having a shot, leave all the glory to Fish and reluctantly sleep as much as one could in such a nest. The goat settled the anxious question for me; by dint of much kicking and scratching he managed to force a way to between the double walls of his home where he sensibly went to sleep.

I rather believe that Fish lived up to his reputation and did the same. The only adventure that he had to tell of during the night had been the cause of all that uproar. John and Simbota had felt insulted on being sent to bed, so John had stolen Fish's little gun and Simbota my hunting knife and those two tigers had stealthily moved the door and crawled into the goat kraal—hence all the uproar and disgust on the part of the goats—and had endeavoured to sit down in that dark place and wait for the four lions to come through the small hole 5 ft. above their heads, when they intended to kill them one by one as they came in.

Monday, 26th September.—After our sleepless night we were not fit for much. Chelinda 8 miles ahead was soon reached on our jingas, and whilst waiting for the Tenga-Tenga we lay out under a tree and slept soundly. The boys of Chelinda gave us splendid news and said that elephant were always close to their village and that some were even then only about 6 miles off. Up to date it had always been hard to realize that we had ever left the comforts of home at all, although of course we merely took our civilization with us; and elephant alone of all the beasts of Africa seemed to suggest that one would be really away from the haunts of white men.

It needed some cruel tale of death, such as the slaughter of that woman by the lions, to strikingly bring home to one the grim undercurrent of reality that exists in Africa, and this was doubly brought home by the natives of Likoloma. When lazily shooting at the crocodiles the day before, the villagers had asked me to above all kill one very large beast for whom they had a particular dislike. I had one shot, and missed, and did not try again as he sank leaving no more than two eyeballs as a target. A long lean Swahili boy had asked to come with us from the village as he had hunted elephant in his time, but when he arrived at Chelinda he was hurriedly summoned to return because his sister had just been eaten by the very same big crocodile that I had missed.

Tuesday, 27th September.—At last we were going to start after elephant. John and the two gun-bearers went with us, two Tenga-Tenga carried water and food whilst three boys from Chelinda village came forward as guides. One of the latter, a fine old fellow with a little grizzled beard and who carried a short stabbing spear made of

a single piece of metal, promised to be invaluable, for he quietly stated that he had been one of the trackers for an elephant hunter whose fame is world renowned.

We were clear of camp by five in the morning and by 8 o'clock had reached the thick "forest" where the elephants had been the previous day, and there for the first time saw the huge footprints of the creatures. The tracks were for the most part ancient, and dated from the previous season's wet weather, great holes 9 in. deep where every step had sunk into soft ground. But the old man soon picked up the new spoor and out of a confused jumble of marks determined the direction which the elephants had taken. The herd had consisted of about 15 animals, of cows and young ones, and with one big bull. They seemed to have been quietly moving northwards to the edge of the forest, and then much to our grief we found they had formed into the single file formation which denoted a deliberate trek to some other grounds.

Anyhow we followed them, and with our first experience of following elephant we realized that it was not to be all amusement. For four and a-half hours we silently trudged after the huge footprints. The heat was intense, and the ground amazing hard, so much so that at times the spoor was entirely lost to our European eyes. One hardly expected that 15 elephant could leave no trace of their movements behind them, but such seemed to be the usual case, until on reaching some patch where the grass had been recently burnt one could again see where every step had been taken and the boys would begin to speculate on the number and size of the herd. There was no question as to our having reached the certain home of the animals for every few yards one could see the signs of their work such as broken tree branches or remnants of their dung, and often the faint traces of the new spoor became lost in the many old tracks and marks, some of which were only a few days old. And so we went on remembering the advice given us to never talk out loud and always to be ready to come upon them at any moment. The wind was favourable with the slightest puff in our faces—and in the breast pockets of our shirts we had a little English flour to tap and so find out if needs be how it blew.

It was nice country with clumps of low bushes at the foot of euphorbias or strange trees, with stranger seed pods hanging from them, scattered about 30 yards apart and never thick except when bordering some dried-up sandy-bottomed nullah. In the shade of one of these we halted for lunch, well-nigh exhausted by that oppressive heat which hitherto we had always avoided by a midday siesta.

After half-an-hour's rest we rose, whereupon Fish commenced to grumble and talk at the top of his voice, and so began our first sincere quarrel. It was one thing to grouse—I had been doing so in a

despairing murmur for the last two hours myself—but if there was anything to be believed in what the books said it would be quite useless to both spoor, and at the same time chatter out loud some silly desires as to the elephant being a couple of hundred yards away. Even the old man with a spear looked pained, the boys patiently waited until we had finished our estimates of each other's characters and we were again ready to push on up wind and through the thick bush along one edge of the twisting nullah, when we suddenly and quite distinctly heard some crashes of broken trees not 100 yards off and found ourselves sniffing the air at a heavy smell which had last been smelt in the Zoo at home. With a silent bound Simbota and Kokwana were pressing the big guns into our hands, John's face began to twist and quiver with savage excitement; the Tenga-Tenga and villagers vanished, and the old man alone completely calm began to quietly lead the way.

It was a very thick spot with long unburnt grass which we crept through to the lesser cover of bushes and trees at the donga's edge. And here the old man stopped, with one whisper of "Njobvu" (elephant) and with the satisfied assurance of the man who has done his work he pointed across the water bed and stepped behind us. The donga was barely 20 yards across, with the far bank fringed by the same big trees, and in vain we peered into them trying to distinguish some form which could account for that rustle of slow movements, until there was another rending crash and a big branch was seen to be slowly forced down and gradually a long grey trunk, with behind it a great flat ear, took shape high up amongst the leaves, and the outline became confirmed by the white glimmer of ivory.

Presently other grey forms were indistinctly seen, then a baby elephant walked into an open patch and was joined by her mother, and both went back to the shade of the trees. The whole herd must have been within 35 yards of us, and yet personally I never saw more than five at any one time. John who was kneeling alongside us said that he could count eighteen. At first his usual desire to get Nyama of any kind had got the better of him and he had entreated us to shoot at everything and anything, but we knew better than that, and for fully 10 minutes we tried to distinguish a bull of size worth aiming at. There was one smallish fellow, with ivory which could only have been of about 15 lbs. weight, whom we spared, and all the other tusks which momentarily appeared through the leaves showed the long thin points of cows. The herd seemed to be gently strolling around in the shadow of the big trees, keeping up a continual steady swing of those great ears which would often be the only visible part of their bodies. At last the huge shape of the one big bull, whose spoor we had followed, slowly pushed to one side, and to our bitter disappointment we saw he was without ivory.

After watching the herd for another five minutes every second of

which was thrilling although probably safe, for an elephant is very blind and comparatively deaf, we were preparing to crawl away when a wretched little fly flew into my eye and utterly blinded me. Finally Fish's assistance had to be obtained to get it out, and in the end we both boldly stood up behind a tree and he set to work extracting it. But before doing so he whispered "Hold my gun for me." "Is it at safe?" said I. "No! and I shan't put it at safe either with those beasts still talking over there," and we again began to squabble. So I bent down to put it at safe and with a deafening explosion the 470 went off and a bullet which must have passed within an inch of both our heads went speeding into the sky. It was one of the most terrifying moments of our lives; each of us thought himself and the other dead, the elephants who had promptly bolted the other way were forgotten, John shrugged his shoulders with scorn, and until late that night when safe in bed (near a village named Kachepa) our ears were still ringing with that horrible noise, and our tongues wagging with mutual recriminations about a first shot at an elephant—recriminations which for my part were doubly vehement at the thought of how close I had been to killing my friend. Let novices take heed!

Wednesday, 28th September.—Kachepa was only about 10 miles north-west from Chelinda, and about a mile north of the main hoe road to Fort Maguire. All south of that road and right up to the lake's edge the bush was intensely thick, a close mass of slender leafless trees about 4 in. in diameter, but scattered about at every hundred yards or so apart one found a baobab whose cream-of-tartar fruit attracted the elephants when they stood resting from the midday sun.

By 5 o'clock we were again out in the direction of the lake hoping to cut across some spoor, and by 6.30 came upon the tracks of two good bulls, both worth following too, for the spoor when measured across with one's forearm reached from the point of the elbow to the tip of the third finger.

Until midday we trudged on, twisting round and under the little shadeless branches which the bulls had merely brushed aside, until again we heard the sounds of their movements, some distance off. But this time when just approaching our prey we stepped into a regular jumble of quite fresh spoor and almost simultaneously found ourselves on top of a herd. In order to see at all it was necessary to get most unpleasantly close; then as on the previous day we had the same long gaze through branches, and when at last we did locate the individual shadowy creatures it was only to have another most sickening disappointment. There stood the same old tuskless bull towering high above us, and we realized that the same useless herd which we had scared yesterday were again in front and dividing us from our proper target.

There was not much point in staying there for long, in fact I doubt

if anyone can feel really at perfect ease when only 30 yards of thin twigs separated one from a herd of those huge beasts, and when a cow suddenly gave a shrill scream of anger at one of her naughty children who was lying down, we quickly retreated. A detour to pick up the two bulls' spoor proved useless and we crawled back under the cruel sun to the comfort of our tents.

Thursday, 29th September.—John came to give us important news when we had finished our early breakfast. Our despondency at not having already killed an elephant in our first two days' chase after them had touched his gentle heart, so he wished to reassure us by tales of good omen. During the night he had had two good dreams, dreams which he only dreamt when something wonderful was going to take place, and he wished to tell them to us. With the soft voice of any little lady talking in a drawing-room he let fall from his lips "Bwana. I dream I am a little child playing with the small stones on the shore of the lake. That is a good dream, and Bwana will get Njobvu to-day. But, Bwana, I dream my best dream also," and with a sudden change of expression which became quite ghastly in its savage intensity, "I dream I cut up man's stomach. Bwana will indeed get Njobvu to-day."

Thus enheartened we set out northwards and seemed to spend interminable hours walking in a great circle, ever hoping to find some tracks worth following. Once we found the spoor of some small bulls, not big enough to follow, and again found the quite new tracks of a herd of cows and young. Several times we came upon individual footprints of cows, and even upon the trail of some little lonely baby elephants whose parents must have been slaughtered by the Portuguese natives. We must have gone a good long way and perhaps over the borderland, for we twice heard some far-away sounds of shooting, which could only have been caused by a Portuguese native. These boys are all allowed to carry guns and keep up an endless and indiscriminate slaughter of everything they can see, so much so that the small triangle of British country round Fort Maguire was a veritable sanctuary for the poor harassed creatures.

By 1 o'clock we were back in camp telling John that we did not think much of his dreams which he had better try to improve upon. Our village was a very poor specimen indeed of a native home, with water which we were perhaps foolish to risk drinking. However, the great attraction of that Fort Maguire district lay in the good food which we could get, whilst at the same time chasing elephant. Fresh fish from the lake and fresh eggs and vegetables, such as paw paw, sweet potatoes, bananas and fresh mealies, could always be sent for from Likoloma, and we were actually able to get fresh milk from a native who lived near Chelinda and who called himself a missionary because he owned one cow. As usual the skimmy nkuku formed the staple substance of the meal.

Friday, 30th September.—Until 2 o'clock we again exhausted ourselves making a wide circle in the Fort Maguire direction, and practically repeating our previous day's efforts. One incident relieved the monotony, but monotony is a harsh word to use, as for my part I never felt dull when forcing my way through that bush. There was always something of unusual interest in the form of plants or insects to be seen, and one used to make the boys bring in anything which they thought would prove out of the common. Thus one learnt the foods of the elephant, and which seed pods could be eaten as fruit or as medicine, and a mass of little information easily forgotten when wearily trudging along.

We were suddenly stopped dead by hearing quite close to us in the bush the deep-toned reverberating grunts of two lions—"noising" as John termed it. Without a word the porters shinned up the silly little trees which bent to the ground under their weights, and the old man with the spear sidled up to join us in the fun. The wind was right, and the lions apparently unscared as they kept up their "noising" in a way which made us all think that they must for certain be upon a kill, especially as we presently heard the sharper grunts of an interfering leopard hovering around them. Very carefully and quietly we crept through the brushwood until we were within 40 yards of a big baobab, behind which the noise continued. As usual the close-packed cluster of slender stems made all view impossible, and dead leaves from the baobab must have made our movements audible for the grunting ceased and when next heard it was some hundred yards further on where it would have been waste of time to follow. There was no kill under the tree and our boys were probably right when they said that the lions were making love.

The indefatigable old man so intent upon producing us elephant to kill continued out all day, and late in the evening returned to camp with the news that he had again found the fresh spoor of those two big bulls.

(*To be concluded*).

AN ENGINEER OFFICER UNDER WELLINGTON IN THE PENINSULA.

(*Continued*).

(*Edited by* COMMANDER THE HON. HENRY N. SHORE, R.N., RETIRED).

Reverting to the Diary :—*April* 21, 1811. Lord Wellington and Col. Fletcher reconnoitred Badajoz.

April 24. Lord Wellington went back to Almeida. The Guadiana rose this night 7 ft. perpendicular, and carried away the bridge of boats at Jerumenha.

NOTE.—Napier tells us that, on the 24th, Wellington had forded the Guadiana, and pushing close up to Badajoz with a force of cavalry and infantry, endeavoured to cut off a convoy going to the place ; but the alert governor sallied, and the allies lost a hundred men without stopping the convoy.

Lord Wellington's sudden departure for the north again, was brought about by unexpected news that Massena was once more in motion. Meanwhile, preparations for the Siege of Badajoz were pushed forward. The Diary records the restoration of the bridge over the Guadiana on the 29th April ; the preparation of platforms, in the Arsenal at Elvas ; the Artificers being practised at Sapping ; and every exertion being made to procure cars.

The following observations by Napier with reference to the approaching siege are here quoted, as especially worthy of attention :—"This was the first serious siege undertaken by the British in the Peninsula, and to the discredit of the English Government, no army was ever worse provided for such an enterprise. Without a corps of sappers and miners, they were compelled to attack fortresses defended by the most warlike, practised, and scientific troops of the age ; and the best officers and the finest soldiers sacrificed themselves in a lamentable manner to compensate for the negligence and incapacity of government. The sieges carried on by the British in Spain were a succession of butcheries, because the commonest materials and means necessary for their work were denied to the engineers."

We will now return to the Diary, observing that the author acted as Adjutant of Engineers during the siege :—

Elvas, May 4, 1811. Extremely hot weather. Maj.-Gen. Hon. W. Stewart invested Badajoz on the other side of the Guadiana this morning, with 3 Brigades of Infantry and a few Portuguese cavalry. Col. Fletcher and Jones went to meet Gen. Stewart, but returned in

the evening. The 3 large boats moved to the situation chosen, near the confluence of the Caya and Guardiana.

May 5. The enemy reconnoitred very near our new bridge; Col. Fletcher, in consequence procured a battalion of the 17th Portuguese Regt. for its protection.

7th. Col. Fletcher moved to the camp before Badajoz. Capt. Squire and 2nd and 5th Brigades of Engineers left here to carry on the attack against Ft. Christoval. Lt. Forster reconnoitred to the foot of the old Castle wall.

ELVAS, *May* 7, 1811.

MY DEAR FATHER,

. . . For my own part I never felt better in my life. Lord Wellington made a sudden move the day after I wrote to you from Villa Formosa, and Col. Fletcher, and B.-Major Jones and myself came here at the same time. His Lordship remained here a few days only, during which he reconnoitred Badajos, and determined upon undertaking the siege, and then returned towards Almeida, leaving us here to carry it on. Badajos was invested on the sides, on the left of the river Guadiana on the 4th Inst. but by some means (to us unaccountable) not a man have we between this town and Badajos, or on the right bank of the river. If the investment is completed to-night, as I fully expect it will, we shall in all probability break ground to-morrow night. Col. Fletcher went from hence to our camp before Badajos this morning; I have some of his arrangements to see executed, and rejoin him in the course of to-morrow.

It is now very late, you must therefore excuse the brevity of this epistle. . . . We have 21 officers of the Engineers here altogether. I am quite delighted at the prospect of witnessing the operations of a siege such as this is likely to be. . . .

Your very loving son,
RICE JONES.

8th. Maj.-Gen. Lumley appeared before Ft. Christoval about 8 o'clock and completed the investment of Badajoz, with the loss of near 200 men. Capt. Squire broke ground this night before Ft. Christoval, at 450 yds.; the soil proved rocky, and the enemy opened a heavy fire as soon as they began. The 1st Brigade broke ground before the Picourinho with 800 men; and the 3rd on a false attack against Ft. Pardilleros.

May 9th. Having sent all our stores from Elvas, I moved to the depôt before Badajoz; found our Brig.-Maj. had arranged everything for breaking ground before the body of the place at night. At 5 p.m., Col. Fletcher returned to the depôt (having been all day with Sir W. Beresford on the other side of the river) and countermanded all the arrangements; the Marshal having forbidden our proceeding this night. The party at work before St. Christoval were employed during the day in raising the Battery and obtaining cover for the guards. The enemy kept up a heavy fire of guns, mortars and musketry upon them, and their casualties were great. Capt. Ross

and Boteler and Lt. Melville were wounded. The attacks against the Padrillera and Picourinho continued, and the enemy fired upon them occasionally, but without effect. At night the parties were employed in completing the batteries and parallels against the Picourinho and Padrillera. Capt. Squire's Brigades continued their work against St. Christoval, yet raised the battery but little from the extreme hardness of the soil, and the interruption given by the fire of the enemy.

Friday, May 10. The battery against the Picourinho completed and the guns mounted before 9 o'clock this morning. The parties continued raising the battery against St. Christoval. About 7 a.m., the enemy made a sortie with not less than 1,000 men and gained possession of the work for about a minute or two; when they were driven back by the covering party. Lt. Reid, the engineer on duty, was slightly wounded, and distinguished himself by rallying the troops. Nominal reliefs sent to the false attack and that on the Picourinho; the enemy fired occasionally, but did no harm on this side, but against the St. Christoval attack it was very heavy. Marshal Beresford still forbidding our proceeding with the attack against the body of the place, 200 yds. more of the parallel against the Picourinho was opened, and an approach of 250 yds. against the Padrillera was traced out and opened this evening in order to amuse the enemy on this side. The Battery against San Christoval was completed and the guns mounted, notwithstanding the heavy fire upon it. A Battery of 4 guns to enfilade the Bridge and prevent sorties, commenced this evening. Lt. Melville was killed by a cannon shot in the Battery against San Christoval at sunset. Marshal Beresford having given permission to commence operations against the place to-morrow evening, several car loads of stores were removed to the depôt near the Talavera road, during the night.

May 11. Soon after 2 a.m., set out to mark the directions of the intended attack, but was prevented in this by a thick fog at daylight; small parties were employed at the false attack, and at the attack against the Picourinho; the enemy showed some jealousy at the former and opened a fire upon it, but without effect. On the other side, the Battery to enfilade the bridge was much advanced. His country and the service sustained a severe loss in Capt. Dickinson whose head was carried off by a cannon shot, whilst standing on the parapet encouraging the workmen; in him I have lost a sincere and valued friend and brother-officer. He was interred with Melville in Capella de Carvalho.

The Battery against San Christoval opened at daylight this morning; the Portuguese Artillery directing the fire were inexperienced, and made very bad practice; whilst the enemy kept up a very hot fire, and completely silenced it before night. The guns were withdrawn and the embrasures masked in the night; another work was

begun this evening against the enemy's battery in the castle, under cover of the hill, and on the left of that against San Christoval. The Battery against the Picourinha fired nearly 200 rounds this day, but produced not the smallest effect. 1,400 men were ordered to parade at 6 o'clock, the tools arranged at the new depôt, and everything was ready to commence our attack at the body of the place, when at 5 p.m., Col. Fletcher received notice of the arrival of our stores at Elvas, the Portuguese tools being very bad, and it being of consequence to secure sufficient cover before daylight, it was judged expedient to defer the attack until next night, and a letter was sent to Marshal Beresford acquainting him with this determination. At 7 p.m., an order was received from the Marshal to suspend the work and the conveyance of stores across the river, for the present; orders were therefore sent to stop the stores from Lisbon, which Capt. By, and afterwards myself, were sent to Elvas to hurry on. I slept at Elvas this night.

Sunday, May 12. Returned from Elvas this morning. At one o'clock Sir W. Beresford consented to our breaking ground this night. The tools which had been sent back by the Marshal's order of last evening were immediately ordered up again; but it was ½ past 7 before they could be got to the ground where the working party (1,400 men) and the covering party (1,500) were paraded; and it was between 8 and 9 before they could be distributed. The weather which had hitherto been extremely fine became suddenly cloudy this afternoon, with rain, and the night was uncommonly dark and cloudy until 10 o'clock, when the moon rose and the weather became clear. The party were immediately set to work, and opened a parallel 800 yds. in length, at 600 yds. from the place, and an approach 600 yds. to the rear. The soil proved so very favourable and the men worked so well, being unperceived by the enemy, that the parallel was generally 3 ft., and 3 ft. 6 in. deep, by 4 ft. in width, and there was every prospect of being well covered before daylight, when, at 1 a.m. on the morning of the 13th, orders were received to withdraw the workmen from the trenches, and send the stores to the rear. The working and covering parties were then withdrawn, unperceived by the enemy, and all our means of transport employed to convey our stores over the Guadiana. Parties were employed during the night on the batteries against San Christoval; when the moon rose the enemy opened a fire upon the new lower battery.

May 13. All our cars employed in carrying away stores to the right bank of the Guadiana; the stores not worth carriage, or for which carriage could not be procured were ordered to be destroyed. Sent with this order to Capt. Squire at the camp before San Christoval; visited the batteries against that fort and returned by the ford near our new depôt. A pile of timber, fascines, and gabions were burnt there this night.

May 14. At 6 a.m., Col. Fletcher ordered some of the stores crossing the Guadiana to be detained, and officers were sent in every direction to counter order the march of the stores to Elvas, in consequence of a communication from Sir W. Beresford of his uncertainty respecting the advance of the enemy. Shortly after, Capt. Rovena came and informed the Col. that General Cole had received an order to move the two Divisions of his army and raise the investment of the place. I was therefore sent to countermand the orders just given, and went on to Elvas to give the like directions to Mr. Davis. All our stores were over the river this evening. As soon as it became dark all our batteries were dismantled, and the platforms taken up and sent to the right bank of the river.

May 15. Showery weather. The flying bridge taken up and sent to Jurumenha, as were the officers and the artificers. The Marshal wrote to Col. Fletcher recommending him to secure the passages across the Guadiana during this rainy weather, as the ultimate safety of his army might depend upon it. The Col. in consequence, went to inspect them himself, and went this evening to Jurumenha, on his way to join the army. The enemy felt our pickets this morning to learn if the army had withdrawn from before the place, and succeeded in killing and wounding about 90 of our men in the evening. General Cole withdrew his Division at midnight, and finally raised the investment of the place; General Lumley having previously marched from before San Christoval. Attended Col. Fletcher to Jurumenha; arrived there after dark.

CAMP BEFORE BADAJOS, *May* 15, 1811.

MY DEAR FATHER,

A mail leaves this for England to-night, and though I have hardly a moment to spare, I cannot let it go without informing you of the disgraceful termination of our attack upon Badajos, and of my continued health and safety. The investment having been completed on the morning of the 8th Inst. batteries were that night commenced against Fort San Christoval, on the right bank of the river, opposite the town, and against two outworks on the south side . . . those upon the two latter being merely intended as a feint to draw the attention of the besieged to that side, whilst the real attack was to be upon the walls of an old castle which encloses Badajos on the north side, and have not the advantage of being covered by a ditch or covert way. Marshal Beresford was pressed to allow us to begin this our principal attack on the next night, (the 9th) in order that Marshal Soult might not be able to interrupt us before the fall of the place, and which the Colonel (Fletcher) calculated would take place in five days from the time we opened our first parallel; but it was not until the night of the 12th that the Marshal finally consented to our beginning; we however broke ground that night at between 5 and 600 yards from the walls, and had obtained tolerable good cover the whole length of our parallel (800 yards), when, at one o'clock on the morning of the 13th, an order arrived to stop everything, and during that day and

yesterday all our artillery and stores were removed back into Elvas; nothing could have been going on better than we were when this order was received—occasioned, it is said, by a report of Marshal Soult being on his march towards this place. Marshal Beresford with his army (excepting a Division left to watch the Fortress, and they, I believe, will retire in the night) have marched; his Head Qrs. were to-day at Valverde, 4 leagues off.

. . . . . .

The attack upon Fort Christoval was continued all this time in the most determined manner by Capt. Squire. . . . The enemy also conducted their defence with great skill and spirit, and on the morning of the 10th made a sortie in considerable numbers, and succeeded in getting possession of our battery, but were speedily driven out of it again. . . . The officers of our Corps have suffered much; my worthy friend, Capt. Dickenson, and Lieut. Melville fell in the batteries. . . . I have not patience to write more on such a melancholy subject; hoping that justice awaits those who are guilty of all our loss and disgrace,

I remain yours,

RICE JONES.

P.S.—We go to-day to Marshal Beresford's Head Qrs., and if nothing goes on, shall, I imagine, return to Lord Wellington's army shortly.

NOTE.—For the better understanding of the recent operations, it is necessary to turn to Napier's remarks thereon:—

"At this time (May 11th) five engineers had fallen and 700 officers and soldiers of the line had been inscribed upon the bloody list of victims offered to this Moloch, and only one small battery against an outwork was completed. On the 11th it opened, and before sunset the fire of the enemy had disabled 4 of its 5 guns, and killed many more of the besiegers; nor could any other result be expected, because the concert essential to success in double operations, whether in sieges or the field was totally neglected by Beresford. Then, having received intelligence that the French Army was in movement, he arrested the progress of all the works. On the 12th, believing this information premature, he directed the trenches to be opened against the castle; yet the intelligence was true, and being confirmed at 12 o'clock at night, measures were taken to raise the siege."

The fact is, Soult had resolved to succour Badajoz. On the 14th he reached Villa Franca, and being then within 30 miles of Badajoz, fired salvoes during the night, to give notice of his approach to the garrison. Meanwhile, Beresford, after a conference with the Spanish generals, determined to meet the attack of the French Army at Albuera, which battle was fought the day after the siege was raised; viz., May 16.

Resuming the Diary:—

May 16. The morning was far advanced before Col. Fletcher and I left Jurumenha; passing near Olivenca, we heard of the action this morning; rode as hard as we could towards the scene; before we

reached Valverde met a good many servants, Baggage, etc., going to the rear; as we approached the Field, some of the wounded, amongst others, General Cole. Joined Marshal Beresford and remained with the staff. Towards evening the Marshal and suite went into the village of Albuera, intending to dine there on what could be procured, but obliged to evacuate; though the Germans under General Alten did not give up possession of it. The enemy having the bridge could force them out when they liked. Lay on the field near the 34th Regt. Major Dickens affording us all the aid he could; rainy and uncomfortable all night; the ground being so very wet, and no shelter to be found.

May 17. Both armies occupied, all this day, the same ground as yesterday afternoon. During the night we slept under arms as before, but got a little refreshment from Col. Dickson.

May 18. At daybreak it appeared the enemy moved off last night. Rode on with the Spanish cavalry, in pursuit of them, until we came upon a body of their cavalry consisting of 25 Squadrons; when the Spaniards halted and the Conde de Penha Villamor sent me to inform Marshal Beresford whom I soon after met. Col. Fletcher, Jones and myself came here (Olivenca) upon our way back to Elvas, and procured good Qrs.

Elvas, Sunday, 19. Upon our arrival, found Lord Wellington just arrived from Almeida.

NOTE.—Napier tells us that Lord Wellington, after examining the state of affairs, directed the 3rd and 7th Divisions to complete the reinvestment of Badajoz on the right bank, and directed the renewed Siege of Badajoz in person. Resuming the Diary:—

Camp before Badajoz, May 29, 1811. Left Elvas about noon, after making all the necessary arrangements for the siege; found the stores in Depôt, and the troops bivouacing round Badajoz. *May 30th.* 300 men were employed last night at the false attack upon fort Pardeleras, and continued at it all this day. *May* 31. Soon after it became dusk last night, the parallel from the Talavera road, for 1,100 yds. towards the river, and the approach from the Parks began to be opened; two parties of 400 men each employed upon the former, and the same number upon the latter, which was about 1,000 yds. in length. The covering party consisted of 1,200, disposed in two large bodies before the centre of the parallel, with strong detachments upon each flank, and pickets and single Light Infantry pushed out in front. The enemy failed to discover the work before morning, when they opened a fire of six guns. At the San Christoval attack four batteries were commenced:—No. 1 of 5 guns against the Castle; No. 2 of 3 guns and 2 howitzers to breach the exposed flank of Fort San Christoval at 400 yds. dist.; No. 3 a battery of 4 guns to destroy the interior defences of the fort at 800 yds. dist.; No. 4 for 4 guns and 2 howitzers used as mortars, to

enfilade the bridge and intercept the communications between the Fort and the Town. A parallel was also begun connecting the batteries; the working party employed consisted of 1,200 men; the covering party of 800. The enemy discovered their party and kept up a fire during the whole night.

NOTE.—From May 31st to the night of June 2nd the Diary gives full details of the number of men employed, and of the nature of their work. By the evening of June 2, "The batteries were all armed and furnished with ammunition."

June 3. At ½ past 9 this morning the batteries all opened; fired very inaccurately all day; but brought the old wall of the castle down before evening.

NOTE.—Full details of the siege works being given by Napier—and in greater detail by Sir John Jones, I pass on to the entry for June 6th :—*June 6th* to *7th*. At midnight the breach in the Flank of Fort San Christoval was assaulted without success. The advance of 25 men was led by Lieut. Forster who was mortally wounded at the close of the fight, which continued for more than an hour, with the greatest obstinacy on both sides. The foot of the breach said to have been cleared by the enemy to the height of 7 feet after it became dark in the evening.

After this failure, more guns were mounted, the fire resumed, and preparations completed for a renewed assault.

Sunday, June 9. At the end of this day's firing the rubbish in the castle breach was considerably increased; and the breach in the flank of San Christoval is again said to be practicable. At 9 this evening the party moved out of the works to assault Fort San Christoval, led by Lt. Hunt, who was killed on the glacis. The enemy being prepared gave them a sharp reception; the party consisting of 200, with an advance of 25, got into the ditch, where the Comdg. officer was killed. The attack continued about an hour, when the remains of the party, unable to force the breach, were recalled. The quantity of shells and combustibles thrown by the enemy into the ditch was enormous. We lost forty killed and 100 wounded.

June 10. At ten o'clock this morning a truce was obtained to bury our dead, during which I advanced to the French Picquet on the Rivellas to ascertain the fate of a Portuguese serjeant who was shot whilst accompanying me in reconnoitring the breach last night. In consequence of the movements of Marshals Soult and Marmont, and the deplorable state of our artillery, Lord Wellington, after the failure of last night's assault, determined to raise the siege.

June 12. The siege finally raised; the guns and stores being all retired. Our losses in the operations of the siege were 9 officers and 109 men killed and 25 officers and 350 men wounded and missing. *June* 19. The French armies under Soult and Marmont having joined, entered Badajoz.

CAMP BEFORE BADAJOS, *June* 12, 1811.

MY DEAR FATHER,

My last letter dated the 15th of May informed you of the chagrin we all felt at being obliged to raise the siege of Badajos; my present, I am sorry to say, has the like unfortunate news to communicate. After 12 days of open trenches, and 8 days battering, we have a second time sent our artillery and stores across the Guadiana to Elvas, and are now about to break up, and remove to that place ourselves. I have not time to send you a detail of our daily operations, and indeed it would be of but little use, as the newspapers will give it at greater length. However, I will just run over the dates of events as they happened since my last. The afternoon of that day we went from the camp to Jurumenha, for the purpose of inspecting the bridges across the Guadiana at that place, upon the security of which the safety of our army would entirely depend in the event of its meeting with a defeat. The next morning I proceeded with Col. Fletcher to join Marshal Beresford; upon the road we heard that his army was then engaged with that of Marshal Soult, and we of course pushed our horses to their utmost to get up in time; but before we could reach the field, the enemy were repulsed, and were quietly reposing on their own ground. I thus unfortunately missed the sanguinary battle of Albuera. We remained upon the ground that night, as well as the whole of the 17th in expectation of another attack; the whole French army being drawn out in front of us. During that night they began to retire, and the morning of the 18th found only their cavalry before us, which soon moved in compact order, being not less than 20 Squadrons, upon their principal routes. We then returned to Elvas on the 19th, and met Lord Wellington who with the 3rd and 7th Divisions had marched from Almeida after their repulse of Massena near that place. His Lordship immediately decided upon undertaking the siege of Badajos again, and upon the 29th of May we opened ground before Fort Paderillas, as a feint to draw the attention of the enemy to that quarter; the next night we began our approaches and parallel on the low ground before the old castle that I described to you before. . . . On the 10th it was determined to raise the siege, the reinforcements for Soult being at hand, and the old walls having proved so very hard and tough as to baffle all calculations as to the time when a practicable breach could be effected with the old, miserable Portuguese guns, which were nearly all disabled by our firing; and, added to our having expended nearly the whole of the shot and shells from Elvas, were I imagine the motives of this decision of his Lordship's.

We lost two very fine young men, Lts. Forster and Hunt, leading the storming parties to the assault; Capt. Patton was severely wounded, but I trust is doing well, and Capt. Mulcaster lies extremely ill from a fever brought on by excessive fatigue. I have met with several narrow escapes in common with the others, and have much reason to be thankful for having gone with safety through both sieges. . . .

Your very loving son,

RICE JONES.

NOTE.—Here again failure was due to the inadequacy and inferior quality of the means available. The guns,—says Sir J. Jones, were of brass, false in their bore, and already worn by previous service; and the shots were of all shapes and diameters, giving a windage from 1-10th to half an inch. The chambers of the howitzers used as mortars were all of unequal size, the shells did not fit the bore, and their beds were unsteady, so that the practice was vague and uncertain. The very tools,—says Napier, were unfit for work; the French cutting instruments were eagerly sought for in preference;—"and when the soldiers' lives, and the honour of England were at stake, English cutlery would not bear comparison with French!"

Sir John Jones, in his review of the operations, thus sums up:—"The most critical examination of the operations of this siege will not allow of blame for its failure being thrown on any one. From the general to the soldier each did his duty; nor should the want of success discredit the original project. It must be admitted that there was a judicious application of all the means that could be collected for the reduction of Christoval. On trial those means proved insufficient; many of the causes of their insufficiency could not have been foreseen, and others, if foreseen, could not have been remedied; all that skill and bravery could effect was done."

Lord Wellington, in one of his Despatches, wrote, "I believe the failure in the attack upon San Christoval is, like many other events, to be attributed to the want of experience in the British army."

Napier, writing many years afterwards, with complete knowledge of the circumstances, and with due deliberation, declared that, "Fifteen days of open trenches and nine days of fire was all that could be expected, and with good guns, plentiful stores, and a corps of regular sappers and miners this time would have sufficed; but none of these things were in camp, and it was a keen jest of Picton's, that 'Lord Wellington sued Badajos *in forma pauperis*.'"

Sir John T. Jones, in his "Journal of the Sieges," also remarked on the inefficiency of the Portuguese artillerymen, who "though brave and zealous, were very young and inexperienced, and after a few rounds their practice became very uncertain." And yet strange to say, in recording the siege operations at Olivença, a few weeks earlier, and which resulted in the capture of that fortress, and in which these same "young and inexperienced" Portuguese gunners worked the breaching batteries, the same writer tells us that "the artillery consisted of a company of Portuguese artillery under Capt. Jose de San Payo," and that, although "composed principally of young soldiers, showed a good deal of spirit and steadiness; for though exposed to a brisk fire and a good deal of musketry, which killed two and wounded six others in the breaching battery, scarcely a shot was thrown away." In comparing Sir John Jones' account of

the Siege of Badajoz, with the entries in Rice Jones' Diary, there is a curious similarity, which seems to suggest that the distinguished author of the "Journal of Sieges" drew extensively on his friend's "Diary" for the narrative.

Some idea of the inferior material with which this siege had been undertaken may be gathered from the Diary of Sir Alex. Dickson, who, as a Capt. of artillery was in charge of that branch at the siege; he wrote,—"The guns we got from Elvas for the siege of Badajoz were brass Portuguese guns of the time of John IV. and his son Affonso, bearing the dates 1646, 1652. Also some Spanish guns of 1620." The comment of Sir J. Jones on the operations is to the following effect:—"Everything else was on the same scale of inferiority, and it may be considered as fortunate that the approach of Marshal Soult's army caused the siege to be raised; as otherwise, after a further sacrifice of men in other feeble attempts, it would have brought itself to a conclusion from inability to proceed."

From June 22nd onwards, Jones was at Campo Major,—"assisting Capt. McCleod in the erection of a line of sham works towards Ougella, an old castle, occupied by a few Portuguese." Early in July, he joined the Light Division,—"bivouacing in the woods, where we continued quiet until the 23rd; when Head Qrs. removed to Portalegre, and the Light Division occupied Castello and the adjacent villages; but I was not well enough to accompany it, and remained at Elvas until the end of the month. *August* 3. Rejoined General Craufurd at Bemposta."

(Undated—probably July).

My dear Father,

There is nothing new to inform you since my last. I am now with the Light Division on the Caya, about 3 leagues above Elvas; the rest of the army are on the same river or in its vicinity, between Arronches and Elvas, and Head Qrs. are still at San Vincente. We have heard nothing certain of the enemy's movements lately. General Craufurd has thus far behaved civilly enough; and Ross and his troop of Horse Artillery, who are attached to the Division, are particularly kind. . . .

P.S.—Since writing this I find that 2 Divisions marched this morning towards Castello Branco, and it is said the others will follow.

Note.—The Light Division resumed its march on August 7th passing a village very beautifully situated in a "wood of beautiful Chestnut trees, and near a very fine stream of running water;" and bivouacking for the night in a wood of fine large chestnut trees. Thence onwards, till, on the 9th Fuente Guinaldo—just inside the Spanish frontier—is reached—"a good town; the best we have seen since we quitted the Alemtejo." Next morning the march was resumed before daylight, and Mortiago reached the same evening, in heavy rain.

From Capt. S. R. Chapman.

PALL MALL, *Aug.* 6, 1811.

DEAR JONES,

. . . I think it likely you will soon be ordered home, to take possession of your appointment to one of the Adjutancies; I suppose in the first instance you will go to Woolwich. . . . As your new appointment is of a permanent character, at any rate it is so till further promotion . . . I hope you feel more comfortable with an Epaulette, tho' with a Frinze; the rank you have obtained is I think one of the most important steps in our Corps. . . .

The R.M. Artificers, which I hope will soon be called Royal Sappers and Miners, are to be taught to construct Batteries, Trenches, etc., etc., and I hope with the care that is to be taken to instruct them properly, they will be found to be a very useful body of men. . . .

Yours ever sincerely,

S. R. CHAPMAN.

Addressed to:—

CAPT. RICE JONES,
Royal Engineers,
British Army, Portugal, Lt. Division.

Aug. 11. Marched at daylight; lay upon our arms at Zamarra for some time, until Genl. Murray came and ordered us to march towards Ciudad Rodrigo. At the ruined Convent of Caridade met some squadrons of Dragoons, and Cpt. Bull's troop of Horse Artly. Left the Division near the ford by the Convent, and went with General Craufurd to reconnoitre the place, taking 20 of the Royal Dragoons as our escort. Rode round at the distance of 1,000 to 1,800 yds. from the works, to the height in front of San Francisco. The new work constructed by the French appears small; the ditch seems respectable, and the work well manned. New embrasures are making in the principal enceinte of the place, particularly in the faces fronting the suburb on the Salamanca Road. In the afternoon we returned to Martiago by the same road, a good deal fatigued from the heat of the day, and the roughness of the roads.

NOTE.—In explanation of the above, it may be stated that Wellington, so Napier writes, learning from an intercepted despatch that Ciudad Rodrigo was in want of provisions, and hoping to profit from this circumstance, crossed the Tagus at Villa Velha early in August, and moved by Castello Branco towards that fortress, pretending he sought healthy cantonments. He had already planned to take Rodrigo by surprise; for which purpose he had caused a battering train just arrived from England with their gunners to be secretly landed at Oporto, carried up the Douro in boats to Lamego, whence they were taken to Villaponte near Celorico, without attracting attention. "The bringing of 68 huge guns, with proportionate stores across fifty miles of mountain was an operation of magnitude; 5,000 draft

bullocks were required for the train alone, and above 1,000 militia were, for several weeks, employed merely to repair the road; the effort,"—adds Napier, "marred one of Napoleon's formidable projects."

August 15. Hearing the French are making an incursion into the Sierra, General Craufurd set out with an orderly Portuguese dragoon and myself through Saugo to the Puerto, or pass above Gata—distant 4 leagues, the greater part footpath, through low brushwood, etc. After some consideration we descended the pass on the South side by a paved road for about a league to the town of Gata; met a Spaniard with a letter concealed in his clothes giving an account of the visit of the enemy to the towns in the Sierra, and stating they retired from Gata in the morning. Although Gata is an inviting town, and the inhabitants appeared well-disposed, the General conceived it would be imprudent to sleep there, as the enemy's movements were unknown, and seemed uncertain. We therefore went a league further to Cadalso; upon our arrival found a French Proclamation just posted up in the Market-place; but being too tired to proceed, were obliged to stay at Cadalso; from whence the next day we returned by Escargo Maria and Robledilla to Martiago.

MARTIAGO, *August* 14, 1811.

MY DEAR FATHER,

Since my last letter we have made rather a long march, and instead of being near Badajoz, we are now about 3 leagues from Ciudad Rodrigo. A variety of reasons are assigned for this movement, but I am so utterly ignorant on the subject that I will not venture to send any one of them. Some say we are going to besiege Ciudad Rodrigo, but of this I must confess I have some doubts. We arrived here on the 10th inst., the next day we made a kind of reconnaisance of the place, and returned here in the evening; since when we have halted, and are cantoned in the neighbouring villages. Where the rest of the army are I cannot tell, but I believe somewhere on this side of the Coa. Head Qrs. are at Fuente Guinalda, 3 leagues west of this village. I am extremely comfortable with this Division; it is always in front, and if anything occurs is sure of having its share. General Craufurd is particularly civil, and although he rides hard every day, and knocks up my horses, which are not the best in the world, yet he keeps one of the best tables in the army, and as I live with him, and my health is such as to enable me to stand the fatigue, I do very well.

I have not heard a word of the Adjutancy;—indeed I would rather not (whilst there is anything going on in this country) be ordered to return at once. It is very odd that Major Chapman has not answered any of my letters on the subject; but I suppose he is very busy, or, else, like some others, has learnt the importance attached to an official character, whether in the Ordnance Office or the Inspector-General's.

I have not a word of news to write to you this time. . . .

Your very affectionate son,

RICE JONES.

NOTE.—The following letter, which appeared in the London *Times*, may well find a place here at this stage of the war :—

From THE TIMES of 1811.

THURSDAY, AUGUST 29.

TO THE EDITOR OF THE TIMES.

SIR,—As the public seem at present rather out of spirits respecting our progress in the Peninsula, and as the great influence which *The Times* possesses over the public sentiment has always been exerted in supporting the determination of the country to maintain its honour and existence, I submit to you a few ideas, which will, I am persuaded, give a material turn to the sentiments of our countrymen, who are too apt to be elated beyond reasonable bounds in the hour of success, and unnecessarily dejected, if the prospect appears even *momentarily* altered.

When Lord WELLINGTON was following MASSENA to the frontiers of Portugal, Englishmen expected that the whole French army (150,000 men) were to be driven over the Pyrenees in six weeks. His Lordship is now on the defensive; and we begin to contemplate the probability of a return to Torres Vedras. Let it, however, be recollected, that Lord WELLINGTON's movements, though not marked with the brilliant results of great victories—of captured cannon, of standards, or wounded prisoners,—have yet had the following *solid* effects :—

1st. *The recovery of the whole province of Asturias*, and the consequent advantages of recruiting the Spanish force by new levies—of posting those levies in almost inaccessible mountains—and of lessening the resources (of subsistence, etc.) of the enemy. 2dly. The recapture of Astorga, which cost the French a long siege, and near 2,000 men. 3dly. A loss to the foe of not less than 4 or 5,000 men, from desertion (see accounts from Corunna), sickness, and fatigue (*vide* SANCHEZ' action, etc.). 4thly. Immense fatigue to the French forces, who have marched several hundred miles, and have now to retrace their steps. And 5thly. The increase of the Spanish Guerilla force, which has received an accession of at least 4,000 men. Are not these results fully equal to any thing which even a splendid victory could have produced? And these results have been produced without our having to regret the loss of five or ten thousand brave men.

In a word, is the situation of the French improved since August, 1810? Are they nearer to the conquest of the Peninsula? In August, 1810, they had 200,000 men in the country—were acting on the offensive, and penetrating into Portugal. They have now about 136,000,—dare not look at Portugal,—have lost 10,000 square miles of the territory they held in Spain,—and are everywhere on the defensive;—and so threatened and harassed, as to be obliged to run from one post to another to meet the threatened attack,—first rushing to the south, and then hastening back to the north: one moment assembling—again subdividing; and daily losing men, ground, and *confidence*.

I am, etc.,

Norwich, Aug. 24. R.M.

August 16. Bivouac near El Casar. Proceeded with Lieut. Scott, 95th Regt., to Robledilla and instructed him to post himself and his party of the 95th to guard the pass. Procured a guide from Robledilla, and went along the Eastern ridge of the valley running from Robledilla to Cadalso, for some distance; then took a turn to the left and descended into a cultivated country, and soon after reached Toricilla; stopt there but little, the enemy being in Villa Nueva, about 3 miles and within sight; proceeded to El Pino and from thence to Cavar de Paloma, where I met Capt. Grant who is employed to obtain intelligence, and was well known to all the people in the neighbourhood. After dining with him, rather scantily, we led our horses by some by-paths to a garden near a brook, where Grant thought we might sleep in security under the shelter of some Olive trees.

August 19. Breakfasted on Roasted Potatoes, and left Grant, proceeding by El Pino up a narrow valley never visited by French or English, and, from its situation, nearly inaccessible. Ascended by a long and dangerous path to the Puerto Vieja, from whence the descent is much easier to Martiago.

August 22. Accompanied Genl. Craufurd to Mayllo, through Moras Verdes, in order to make ourselves acquainted with the country. *Aug.* 23. From Mayllo we proceeded through Cuceado to Sequeros, a village finely situated near the right of a hill looking over Miranda de Castanar to Bijar; but troops of the enemy being close round us, and expected to arrive for their rations levied on the village, we remained only long enough to bait, and descended to Villa Nueva del Conde, a larger place, but not so pleasing; received with acclamations when known to be English; but passed through without stopping and proceeded by an intricate road through Valero and San Miguel de Valero, to Linhares, where we remained the night, and were well entertained by the Padrè Curé. Returned to Martiago next day, by a different route.

MARTIAGO, *August* 28*th*, 1811.

MY DEAR FATHER,

. . . The day before yesterday I received a letter from Major Chapman, wherein he tells me that upon General Morse's resignation he had not failed to speak to General Mann about my Adjutancy, though he did not believe that his former application would have been passed over, "besides which," says he, "Handfield is much your friend, and I think it likely you will soon be ordered home to take possession of your appointment; I suppose in the first instance you will go to Woolwich; let me know how you will like this." He likewise states his expectation of seeing the Ryl. Military Artificers called Ryl. Sappers and Miners very soon; and as they are to be drilled in the construction of batteries, trenches, saps, &c., trusts that they will prove a useful body of men; I hope they may, but I cannot say that my expectations are very sanguine on that head; altering their name is undoubtedly doing something, but

whilst they are kept constantly at work in the different shops at Woolwich, Chatham, or Portsmouth, and without officers who can be responsible for the companies wherever they may be, (which is at present the case)—for the Commdg. Engineers have neither the time or inclination to undertake the task, and the superannuated Sergt.-Majors, who were, 3 or 4 years ago made Sub. Lts. are totally incapable of it. If they will give me the charge of a Battalion, to be disciplined like other soldiers, and taught sapping, etc., so as to be useful in the field, I shall feel happy in devoting my time to the attainment of what will prove so highly useful to the service, and creditable to ourselves. But if the name only is to be changed, and the men, after working all the week, are to be drilled and become soldiers on Sundays, and the King's Birthday, only, I shall for ever regret my having returned from such a desirable and honourable service, to partake of the disgrace that such a set of undisciplined Vagabonds must bring upon anyone that has anything to do with them.

I enter thus largely upon this topic, that you may not be surprised if, upon my entering into the duties of my Adjutancy and finding it impossible to discharge those duties creditably, I should without hesitation prefer (as I undoubtedly ever will) to return to my duty as an officer of Engineers, wherever they may choose to send me. However, I now indulge somewhat of the hope of getting a respectable Battn. of Sappers; and future armies will not, I trust, find themselves before another Badajos, without a single man who had seen, much less worked, at a *Sap*, which requires so much practice to carry on at all; whilst at the same time the French Corps of Sappers and Miners are the finest body of men in their army.

We remain here exactly the same as when I wrote to you last; but the enemy have within these few days past evinced an intention of moving from Plascencia and Valladolid, so as to prevent our besieging Ciudad Rodrigo, for which purpose every preparation has been making; although I do not believe that we can under present circumstances venture to take our battering train, etc., across the river Agueda; and without which we cannot undertake the siege. A week or ten days will probably show us what they intend doing. I do not feel very confident that we can remain very long so far advanced into Spain as we are at this moment. I shall do all in my power to remain with Genl. Craufurd until things take a turn, either one way or the other. If the army advances we shall be in front; and if it retires, our Division will form the Rear Guard. Added to this the civility and attention I constantly receive from the General, and you will, I am sure, agree with me, in conceiving it highly desirable that I should remain here whilst any active service is going on. They are not in general very quick at our office, and I therefore hope I may not receive my orders to return just yet.

Should I land at Falmouth or Plymouth, I will not fail to see you on my way to London, at least if you are at Bristol, or anywhere near the road; but, as affairs now are, I think you had better continue writing to me here. . . .

Your very affectionate son,

RICE JONES.

(*To be concluded*).

TRANSCRIPT.

NATURAL *POINTS D'APPUI.*

From an article by V. Polyanski entitled "The Influence of the Psychical Element, in Conjunction with Other Factors, upon Fortification Types," in the April, 1912, number of *Injenerni Jurnal.*

LOCALITIES which may serve as *points d'appui* in a defensive line are very varied in character. Under this heading may be included villages, woods, groups of buildings, separate buildings, groves and parks. Hills are not included as the nature of their defences bring them within the category of artificial *points d'appui.*

Not all of the above-mentioned localities are suitable for occupation as *points d'appui.* Those for instance which are of small extent are liable to rapid destruction by the concentrated fire of modern artillery. But such localities, and especially villages and woods, as can be placed in a state of defence by simple methods and by their own garrisons, are largely even in these days adapted to very vigorous defence.

We will discuss this matter by taking in turn the following conditions which are necessary to *points d'appui,* and will inquire whether any of these conditions, and, if any, in how great a degree, are satisfied by the localities mentioned.

(1). *Vigorous Defence during a Prolonged Period.*

This condition requires a definite strength of garrison (1 to 2 battalions), frontal and flanking fire, sufficient fire in rear to protect the obstacles, all-round defence and obstacles. All of these requirements are satisfied by villages and woods. Their comparatively long extent of front admits of strong frontal fire, while the irregular line of their borders gives flanking and cross fire and rear defence. Very large woods however are not suitable for *points d'appui.*

In each, but especially in woods, there is a large amount of material available for obstacles, and in each a succession of defensive lines may be organized. These qualities are extremely favourable to vigorous defence, and military history contains countless examples which confirm this view.

(2). *Defence of Approaches to Neighbouring Sections.*

This condition is extremely difficult of realization in field warfare. If a permanent fort, which may come under the fire of artillery, is unable to sweep the approaches to its neighbours except by special arrangements such as shields and armoured galleries, the difficulty of this requirement is naturally greatly increased under field conditions.

This is partly due to the artillery fire which may be brought to bear

upon the locality, and which would prevent the men from manning the firing positions from which the flanking fire is directed, and partly to the instinct of self-preservation which would prevent men from attending to other sections while their own is in danger. If the attack is directed upon the *point d'appui* under consideration as well as upon its neighbour, this instinct compels the men to turn all their attention to the nearer danger. But if they are not threatened by immediate danger they can find, in the comparatively long broken line of the locality, points from which a fairly large number of rifles can be concentrated in the desired direction, and screened by the locality reserves can be brought up for a counter-attack more easily than in the case of a redoubt or other artificial *point d'appui.*

(3). *Cover from the View and Fire of the Enemy.*

The complete cover from the enemy's view which is afforded by all such localities without the expenditure of any labour, and the feeling of confidence thereby inspired in the garrison are of great material and moral value.

To ascertain by reconnaissance what localities are occupied for defence and what are only screens and false *points d'appui,* has become a matter of considerable difficulty, not only previous to a battle, but also owing to the use of smokeless powder, even during the battle itself. Successful concealment from aerial scouting can only be obtained by occupying these localities, as has been proved during recent Russian, French and German manœuvres. However carefully artificial works have been disguised, it has been found impossible to conceal their trenches and banks from the eyes of airmen or from the plates of their cameras. It is true that the defences of localities must also be carefully disguised, but this requires less skill and is more successfully accomplished than in the case of works in the open field.

Trenches must no longer be made in advance of the outskirts, but the outskirts themselves, or better still a line in rear of them, must be prepared for defence. In addition to the ordinary rules for concealment, trenches should now be made narrower than formerly and should be covered with any available materials, such as great-coats, brushwood, branches, etc.

From recent experiments it has been found that woods and shrubs give complete cover from airmen, even for men moving along roads. In villages, it is recommended that there should be less moving about, and that advantage should be taken of the shade given by houses and trees. In the open, on the appearance of aircraft, men should lie down and cover themselves over with their cloaks, etc.

All artificial works constructed in the open are clearly distinguishable by aerial scouts, especially the regular outlines of redoubts, etc.

When one considers the exceptional importance which is now attached to concealment, it may be positively stated that this property of localities has greatly increased their value in recent years.

We will now consider the cover which they afford against the enemy's fire. In this case if we judge by theory only, we will arrive at very dismal conclusions. The accurate and destructive effect of modern

artillery fire appears to answer the question of their occupation once and for all.

A brick wall must be two bricks in thickness if it is to stop modern rifle bullets; villages and woods give good protection against shrapnel bullets and splinters, but the action of the high-explosive shell of field howitzers upon them is very destructive.

"The tremendous moral effect of bombs of large calibre, the shriek of bursting shells augmented by the echo in woods or in enclosed villages, the dense coloured suffocating smoke enveloping everything as with a shroud and hiding the country in all directions, the demolished and overturned guns, limbers, etc., the mutilated corpses, the din and crash of falling houses, the smoke and heat of bursting flames, will make of the future position such a hell, that the man who can preserve his calmness, retain self-possession and steadily perform his duty, must possess 'a heart of iron and nerves of steel'" (Golenkin). If this were actually the case, then the fate of *points d'appui* would be sealed, their garrisons would fly in panic or suffer annihilation.

There have naturally been no experiments in peace time in the shelling of localities. It remains therefore to examine the experiences of war, and to search how we may discount in future battles the fire of modern artillery.

War experience does not confirm the prognostications of the decisive action of artillery fire upon localities. It is true that we have now to deal with the high-explosive shells of large calibre howitzers, but these are much more dangerous to targets of small dimensions like redoubts than to the comparatively large areas of localities. In some respects the old black powder was more dangerous to woods and villages than the modern high explosives. We will endeavour to show how this is the case.

The most effective qualities of modern field artillery fire are the *low trajectory* of the guns, and the *accuracy* of howitzers when searching areas. From their low trajectory the action of the common shell of field guns will be expended entirely upon the outskirts of localities. Shells with sensitive double-action fuzes will explode when passing through trees and hedges, and therefore all bursts will occur on the outskirts. Their splinters will act only weakly, as their sphere of damage will be considerably limited by buildings and trees.

The French at first thought that the introduction of high-explosive shells would annul the value of villages as *points d'appui*, but some experiments which were made with the object of testing this changed their views, as is shown by the following words of General Langlois:—"It would be sheer foolishness to repeat the demolition of the enclosures of Fröschwiller, St. Privat, etc., as the defensiveness of a village would be little weakened by doing this; in rear of the first enclosures there would be second, third and successive lines of defence, depending in number on the depth of the village. To demolish the whole village, the high-explosive shells of a whole Army Corps would not suffice."

The high-angle fire of howitzers has enormous local effect, both material and moral, but from its very accuracy, if it is desired to search

the whole area of a locality, it is necessary to disperse the fire and thereby to reduce its effectiveness, as the war establishment of howitzers is very limited. If the fire is concentrated on one section, the rest of the area would not be affected.

General Langlois writes:—"To demolish a village with high-angle fire could of course be done, but it would be sheer foolishness, if one thinks what a quantity of shells such an operation would require; the results obtained would always be so small that they would in no case justify the trouble and expense which the destruction of an inhabited area would involve."

The fact that localities are shown on maps would presumably facilitate ranging, but actually it does not have this effect. When firing with guns of large calibre the state of the atmosphere, light, and other conditions are important factors, and the measuring of ranges is not so essential as immediate observation of the results of the firing. The outskirts of a locality will rarely be accurately shown, very often they are irregular, disconnected and concealed by bushes and trees, while the depth of the target adds to the difficulty of deciding the actual distances of hits. It is extremely difficult to observe the bursts of shells among houses, and still more so in a wood. All this complicates the ranging and carrying out of effective fire, as was clearly recognized by those who witnessed such firing under war conditions.

Many people place great confidence in the incendiary action of shells and believe that the heat of burning houses would prevent the garrison from defending a village. But modern high-explosive shells have weak incendiary action, as has been shown by recent experiments, and in this respect are considerably inferior to those filled with the old black powder. The rapid burning of high explosives would allow them to set fire to buildings only in exceptionally favourable circumstances, and if the measures recommended in the text-books on fortification are duly taken such favourable circumstances should be avoided.

In the war of 1870–71 there were numerous examples of the ineffective action of artillery against localities. The same thing occurred in the Russo-Japanese War, and the results of the latter being nearer to our own time are more convincing and instructive.

Many examples can be produced in which strong concentrated artillery fire did not produce any material results, but we will limit ourselves to noticing two which we consider the most characteristic. The assault on the village of Sandepu, which ended unfavourably for the Russians, was prepared by the fire not only of field but also of siege guns. On the 25th January 50 guns acted upon this village, on the 26th 156 guns, on the 27th 88 guns, and on the 28th 104 guns. In the same action on the 25th January 56 guns acted against the neighbouring village of Heigoutai. A plan of Sandepu is attached.

In the battle of 27th February large masses of Japanese were concentrated in the village of Lamatun, for counter-attack upon the Russians who had just carried the Black Copse. Against this village the Russians opened fire with 100 guns of heavy calibre, besides some of the Field Batteries of the XVII. Army Corps, the range having been already

decided. In spite of this the Japanese debouched from the village and recaptured both the Black Copse and the lunette nearest to it.

The experience of the Russo-Japanese War convincingly showed that villages make excellent *points d'appui.*

But the question naturally arises:—May there not have been certain peculiarities in the Chinese villages to make them such superb *points d'appui?* This is partly true, but only partly so, as it is not the security of the cover afforded by them that causes the obstinacy of the fighting in localities. In many of the villages after the artillery bombardment there did not remain a single house, a single enclosure wall, with one stone left upon another. But these heaps of ruins which had lost all semblance of bank, trench, stove, etc., gave facilities to the garrison, hidden in neighbouring folds of the ground, or in trenches, or in the village itself, if its area is large and there is room to manœuvre, to reoccupy the firing line, on a wide front and from several directions, and to meet the attacking infantry with severe fire in any desired direction. All ruins give more or less good cover from rifle fire. Shrapnel and splinters, and the high-angle high-explosive fire of the attack must be stopped in good time for fear of injury to their own men, as the splinters may fly backwards for 200 to 300 paces.

Woods have the same properties as villages if they are not too large and not too small. The garrisons can find cover from low trajectory fire by going back from the edge about 100 metres, and from high-angle fire by moving from the parts more heavily bombarded to those less so, for the enemy is unable to follow the movements of parties of the garrison or of the reserve.

War experience has shown that the damage from splinters of timber and from falling trees is never great, as is ordinarily supposed, and that the losses from fire are very small.

The moral effect of shells both in villages and woods is undoubtedly great, but the same war experience has shown that only troops whose *moral* has been shaken by excessive destruction fail to endure it, and fly from the field, failing to occupy the locality before the assault of the enemy's infantry.

Localities, such as Russian villages, consisting of wooden buildings with thatched roofs, cannot serve as *points d'appui* without special engineer arrangements, but they may be used as screens, or for drawing off the fire of part of the enemy's artillery, and thereby lighten the task of the real *points d'appui.*

(4). *The garrisons of localities.*

Some opinions exist that the defence of localities requires very large garrisons, but opinions contrary to these also exist, as for instance a German writer states:—"Woods and villages must be occupied by the smallest possible garrisons; the fault of carrying this rule to excess has happened on very rare occasions, more rarely than the reverse, the assignment of very large forces for the defence of villages."

By the rule proposed by us the garrison of a locality must be 1 to 2 battalions. If it is remembered that a vigorous defence is required possibly for several days, as at Sandepu, it would be risky to assign a

weaker garrison; besides this, 1 to 2 battalions cannot be considered as an excessively strong garrison.

(5). *All the work of defence to be done by the garrison only and in the shortest possible time.*

The majority of localities may satisfy this condition, as in the course of one night a garrison of 1 to 2 battalions can make a firing position and can strengthen it with obstacles. If there is time for further strengthening, the locality can be gradually converted into a post of extraordinary strength (Sandepu, etc.). From the sketch it will be noticed that Sandepu was not surrounded with a complete ring of obstacles.

We may sum up the case as follows:—Localities have an irresistible attraction for troops, due to purely psychological causes, and it may be taken as a rule that in the past they have always been occupied, and that they always will be occupied in future. The new factor in war, aerial reconnaissance, reveals the fact that not only has the value of localities not lessened in recent years, but on the other hand that it has increased. Investigation of their properties shows that their occupation and defence present solid advantages to the defenders. They therefore make excellent *points d'appui* in field warfare.

In conclusion we would note that owing to the properties of modern firearms the main fight will take place behind the outskirts of the locality, and therefore special attention must be paid to the preparation of the first line. The construction of trenches in advance of the outskirts will be exceptional (though sometimes they may be necessary to obtain a special field of fire) partly on account of concealment, but also because of the necessity of connecting these trenches with the rear by communication trenches, as there would hardly be time for doing this under the conditions of field warfare.

Available material must be abundantly used in the construction of light types of cover, and these must be distributed all over the area in various places; it might then be possible to keep the troops of the garrison within the locality during the artillery bombardment, an arrangement which is always extremely desirable.

F. E. G. SKEY.

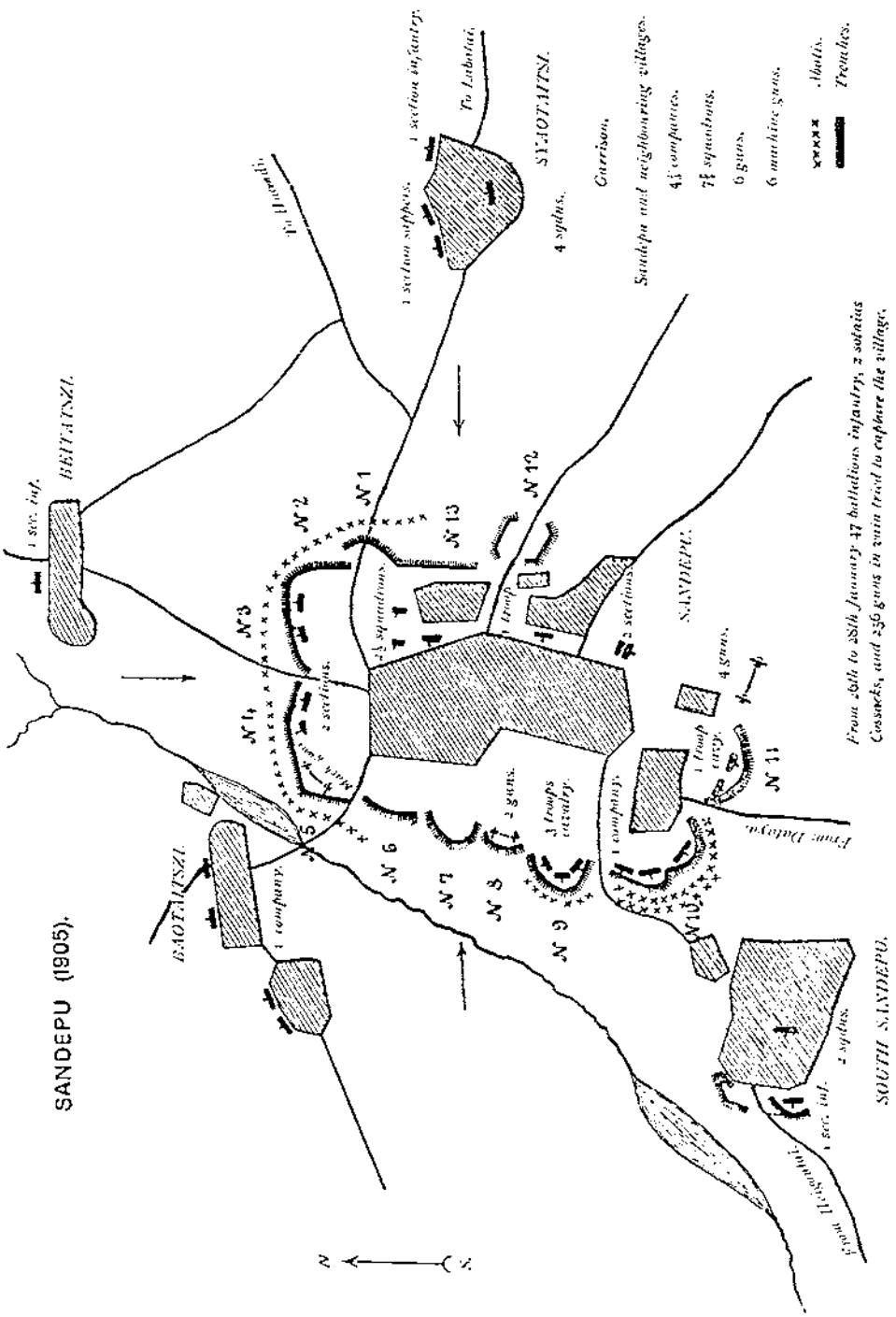
SANDEPU (1905).
BEITATSZI.
1 sec. inf.
SIAOTATSZI.
1 company.
To Lubatai.
1 section infantry.
1 section sappers.
SIAOTATSI.
4 sqdns.
Garrison.
Sandepu and neighbouring villages.
4½ companies.
7½ squadrons.
6 guns.
6 machine guns.
Abatis.
Trenches.
N 1
N 2
N 3
N 4
N 5
N 6
N 7
N 8
N 9
N 10
N 11
N 12
N 13
2 sections.
½ squadrons.
1 troop.
2 sections.
SANDEPU.
4 guns.
1 troop cavy.
1 company.
2 guns.
3 troops cavalry.
From Lubatai.
From 26th to 28th January 47 battalions infantry, 2 sotnias Cossacks, and 256 guns in vain tried to capture the village.
SOUTH SANDEPU.
4 sqdns.
1 sec. inf.
From Hsiaoyu.
N
S

NOTICES OF MAGAZINES.

BOLETIN DE INGENIEROS.

January, 1912.

MILITARY AVIATION.—The author, a captain in the Mexican Engineers, describes in his article the progress of military aviation in France, and lays down the special qualities required in a good airman. He points out how, with the exception of a few very daring professional aviators, the two chief parties interested in aviation are the builders of aerial craft, and flying officers. As regards the commercial class, the constructors of aeroplanes for a time went through a sort of financial crisis in France. The number of machines sold diminished, owing to the decrease of civilian aviators, and it was not until the press pointed out how disastrous it would be to France for her aerial craft factories to fail, that a fresh impulse was given to aeroplaning in the army.

The main qualities required in a military aviator are perfect health, bodily strength, good eyesight, steady nerves, and sound knowledge as an engineer, mechanic and soldier. The importance of free runs and captive ascents in spherical balloons cannot be too much emphasized, as it both aids the aeronaut to get a knowledge of the state of the atmosphere, and to develop his powers of observation at various heights.

After pointing out the expenses of maintenance involved by aeroplanes, and the necessity of having at disposal a large *personnel* of mechanics, carpenters, riggers, etc., with all the shops and tools they require, Capt. Cervantes goes on to show some of the special difficulties which will have to be faced in Mexico, apart from the present lack of any trained pilots. These difficulties are the extreme rarefication of the atmosphere, due to the high altitude, the lack of means of transport and the bad state of communications in the country.

To undeceive those who fondly imagine that aviation is a cheap pastime, the following figures are quoted, showing what aviation has cost the French Government:—In 1909:—240,000 francs for experiments only; in 1910:—2,000,000 francs; in 1911:—3,120,000 francs; in 1912:—(estimate) 7,600,000 francs. At the beginning of 1912, France had actually 50 aviators, so that each pilot cost about 100,000 francs to train.

August, 1912.

MILITARY AVIATION.—This article is also written by Capt. Cervantes and its object is to point out how far aeroplanes can at present be used in warfare. He begins by showing the difficulties of landing and rising

again, feats which in a specially selected place like an aerodrome appear to be easy. He also insists on the special conditions existing in Mexico as regards the atmosphere, owing to the great height above sea level of parts of that country, and how adversely this will probably affect the work of the two foreign aviators who are at present being used by the Huerta Division in the north of the Republic. He adds, that, although they may be animated with the best intentions in the world, these airmen have no knowledge of the climate or country in which they are working. Moreover, of what interest is it to a flying column in guerilla warfare to know that there are 30 or 40 armed men 50 kilometres away? The use of the aeroplane in this type of warfare is apparently very small.

Capt. Cervantes ends by saying that the present employment of aeroplanes in the Mexican Army may be useful, mainly to accustom the troops and the inhabitants to their appearance, but as regards practical results, they will be *nil*.

September, 1912.

There is an article on the aeroplanes with the Huerta Division which consist of a 50-H.P. Moissant Bleriot, and a 100-H.P. machine of the same firm, built to carry passengers.

A. H. SCOTT.

RIVISTA DI ARTIGLIERIA E GENIO.

September, 1912.

BULGARIA.—*Mitrailleuses for Cavalry.*—The Bulgarian cavalry consists of 2 independent brigades—each of 4 regiments of either 2 to 4 or 2 to 3 squadrons—and 1 brigade of 3 regiments of 3 squadrons, intended to form together with the gendarmerie the divisional cavalry. Each of the 3 brigades is said to be furnished with a mitrailleuse section. The *Bulletin de la Presse et de la Bibliographie militaires* of the 31st July states that 1 section of 4 Maxim mitrailleuses is to be assigned to each of the 4 regiments of 4 squadrons of the independent brigade.

Military School.—The *France Militaire* of the 11th July states that a military school will be initiated in Bulgaria with courses from October, 1912. The officers who apply for admission are required to have not less than 4, and not more than 8 years service, and have to pass the prescribed examination for admission. The number of students must not exceed 20 for each course, and the period of the studies is 3 years.

FRANCE.—*Apparatus for Bomb Throwing from Aeroplanes and Dirigibles.*—*La France Militaire* of the 19th July states that a "sight" has been invented for determining the instant at which to let fall projectiles from aeroplanes and dirigibles so as to strike the target. The apparatus consists of a pendulum, in the form of a truncated cone, enclosed in a cylinder. Special arrangements, the use of a very dense liquid which

will not freeze in winter, protection from the air currents, etc., give great stability to the system, which indicates the vertical when the aeroplane or dirigible is passing over a position. The apparatus also rapidly shows the inclination of the airship and the angle which a line from it to the target makes with the vertical. It also permits of calculation for the velocity of the airship, when the proper indicator of velocity is wanting. The field of view of the apparatus from a height of 1,000 m. has a radius of 200 m. around the vertical. Special fire tables placed in front of the apparatus permit of establishing rapidly—given the altitude and velocity of the airship—the inclination noted by the passing observer at the instant he lets fall the projectile so that it may reach the point required.

Aeronautics in the French Army.—We read in *La France Militaire* of the 9th August, that a dirigible and several squadrons of aeroplanes—probably 6, with 6 apparata each—will be assigned to each Army Corps this year during the grand manœuvres. An Army Corps will also have some aviation sections for artillery.

Boats for Cavalry.—The same journal of the 7th—8th July notes that a brigade of cavalry has carried out experiments for crossing rivers by means of a special type of boat. Each cavalry regiment has two of these boats, or pontoons, attached to it, and they can easily be carried by four men. The two boats complete with accessories have a weight of 2,000 k.g. and are transported on one wagon.

Pilot Officers for Aeroplanes and Dirigibles.—The *Bulletin de la Presse et de la Bibliographie militaires* of the 31st July states that the French War Minister has approved of officers, who have obtained the brevet of military aviator or of dirigible pilot, increasing by 30 points the total they obtain at the various obligatory trials carried out at the War School.

GERMANY.—*Exercises for the Use of Search Lights in Warfare.*—The Russo-Japanese War, by showing how the power of modern armaments forces belligerents to make large use of nocturnal operations, has drawn the attention of all armies to the employment of search lights. In Germany, particularly, steps are being taken to accustom the troops to such means, and exercises have been arranged in which the troops have search lights at their disposal. The January number of the *Journal des Sciences Militaires* gives some rules which are adopted in Germany for such exercises. The average useful limit of distance for the light search lights used by the pioneers is 1,500 m., and that for strong fortified places is much higher. However, the conduct of the troops exercised under the conditions of search lights should be independent of their power. Battalions should first be exercised singly, then brigades and divisions. When the use by the enemy of search lights is feared, it is necessary to avoid all objects which reflect the light. Drums, bugles, etc., should be covered with stuff. Horses should be left in the rear; the officers and troops should all move on foot. On the march all means of illumination, even covered lanterns, should be forbidden. All the men of each detachment should stretch themselves on the ground and remain immovable when in the vicinity of the luminous rays of a search light; and remain so until they are discovered. If the enemy's search light is

sweeping the ground regularly, it is necessary to move only when it is turned on to some other point. Companies should move as far as is possible with a small front which allows of their being less visible. Detachments on the march should avoid high ridges and crests, and should avail themselves of places such as the edges of woods, where the luminous rays cannot reach them. Intermittent illumination is most advantageous. The time during which a zone of ground is illuminated should be utilized to point the mitrailleuses, and to make special arrangements for the rifle fire to cover the sector assigned to the detachment. The defenders, except the few told off for observation, should remain concealed as far as is possible. As regards the destruction of search lights by means of a violent fire of rifles and mitrailleuses, experience shows that the estimated distance is very uncertain, and the aiming difficult. Except for very short distances, there is small chance of destroying a search light by the infantry; with shrapnel fire however there is a greater probability of success.

Mitrailleuses on Airships.—*La France Militaire* of the 13th July refers to the new German dirigible Parseval P.L. 8 which is said to be provided with two mitrailleuses as well as with a tube for throwing bombs, and the new dirigible Zeppelin Z. III. is also equipped with a mitrailleuse placed in the front of the airship.

Inspector of the Corps of Engineers.—We read in the *Bulletin de la Presse et de la Bibliographie militaires* of the 31st July that the title of Inspector of the Corps of Engineers and Fortresses is abolished and in its place there is an Inspector of the Corps of Engineers, whose duties comprise the inspection of the pioneers, of the troops of the lines of communication, and of fortresses—all three new formations.

New Instruction for Cavalry.—Under the date of 20th June new regulations for equitation (Reitvorschrift) are published. These apply to other arms besides the cavalry. Those of the field artillery and the train are contained in the Supplements I. and II. In the new regulations a new pattern of bridle is introduced.

E. T. THACKERAY.

CORRESPONDENCE.

DEMOLITION OF HIGH WIRE ENTANGLEMENTS.

DEAR SIR,

On reading the transcript in the *R.E. Journal* of August last, regarding the demolition of high wire entanglements, I determined to expend a portion of my annual allowance of guncotton on a similar experiment.

The charge was made up exactly as described, except that the metal cap was dispensed with; a solid wood head being substituted. The charge was 2-lb. guncotton slabs cut into thirds, *i.e.* $1\frac{1}{3}$ lb. per foot-run, with a half-slab at every 4 ft. to facilitate priming. Total charge, 26 lbs. distributed over a length of 16 ft.

The entanglement was of the usual type.

The charge was fired electrically, and the result was practically *nil*. The posts nearest the charge, *i.e.* within 3 ft., were cut through at ground level and one wire was cut, but nothing in the least resembling a gap was formed.

Yours faithfully,

C. W. BUSHELL,

Lieut., R.E.

Mandalay, 6th November, 1912.

The Editor, *R.E. Journal*.

Notes for Officers Proceeding to India.

By Major A. T. MOORE, R.E., 1904.

REVISED

By Major E. C. OGILVIE, R.E., 1912.

Reprinted by the Council of the Royal Engineers Institute.

Price: To Members of the R.E.I., 2/-; to others, 3/- per copy, post free.

PROFESSIONAL PAPERS OF THE CORPS OF ROYAL ENGINEERS.

FOURTH SERIES.—VOL. I., 1905.

PAPER	I.	**Simple Tunnel Work on the Mari-Attock Railway, Panjab,** by Capt. H. E. C. Cowie, D.S.O., R.E.	1s.
,,	II.	**Long Span Bridges,** by Max am Ende, M. INST. C.E.	1s. 6d.
,,	III.	**Recent Works in the N.W. Frontier Province, India** (Fortified Posts, Roads, Bridges, Civil Buildings), by Bt.-Col. G. K. Scott-Moncrieff, C.I.E., R.E.	3s. 6d.
,,	IV.	**Armoured Trains,** by Capt. H. O. Mance, D.S.O., R.E.	3s. 6d.
,,	V.	**Reinforced Concrete,** by Lt.-Col. J. Winn, late R.E.	2s. 6d.
,,	VI.	**Fortress Warfare,** by Capt. Moritz Ritter von Brunner. 9th edition of the work originally written by Field Marshal von Brunner. Translated by Capt. C. Otley Place, D.S.O., R.E.	3s. 6d.
,,	VII.	**Fortresses and Military Engineering in Recent Literature.** No. 43 of the "Mitteilungen des Ingenieur-Komitees." Translated by Capt. F. A. Buzzard, R.F.A.	5s.

VOL. II., 1908.

PAPER	I.	**The Theory of Arched Masonry Dams,** by Capt. A. ff. Garrett, R.E.	1s. 6d.
,,	II.	**Report on Mechanical Road Transport for India,** by Capt. E. N. Manley, R.E.	2s.
,,	III.	**The Khushalgarh Bridge,** by Capt. H. E. C. Cowie, D.S.O., R.E.	2s. 6d.
,,	IV.	**The Engineer Troops in the Campaign of Melilla,** by Gen. Don José Marvá. Translated by Lt.-Col. G. M. W. Macdonogh, *p.s.c.*, R.E.	3s. 6d.
,,	V.	**Works Economics,** by Brig.-General G. K. Scott-Moncrieff, C.B., C.I.E., R.E.	2s.
,,	VI.	**Moving Loads on Military Bridges,** by Capt. C. E. P. Sankey, R.E.	1s. 6d.

VOL. III. IN PAMPHLET FORM ONLY.

PAPER	I.	**Six Lectures Delivered at the Senior Officers' Course, 16–21 October, 1911, S.M.E.,** by Col. J. E. Capper, C.B., C.S.M.E., Lt.-Col. J. A. Gibbon, R.E., Major G. C. Kemp, R.E., Major J. C. Matheson, R.E., Capt. C. E. P. Sankey, R.E., Capt. H. C. Smith, R.E.	9d.
PAPER	II.	**Notes on Roofs,** by Major E. N. Stockley, R.E.	3s. 6d.
PAPER	III.	**The Growth of Offensive in Fortification,** by Major J. C. Matheson, R.E.	2s. 6d.
PAPER	IV.	**Telephone Transmission,** by Capt. A. D. St. G. Bremner, R.E.	1s. 6d.

The price of separate Papers as above, in paper wrappers, is net, except to Members of the R.E. Institute, who receive 33 per cent. discount. The pamphlets, Paper II., Vol. I., and Paper I., Vol. II., are out of print.

In future the Professional Papers will be issued in pamphlet form only.

They may be obtained from Messrs. W. & J. MACKAY & Co., LTD., Chatham, or from any Bookseller.